6 5 4 3 2 1

D C B A

Layer Definitions

Top Copper routing
Layer 2 split GND/3.3V
Layer 3 split 5V/misc
Bottom Copper routing

Univ. of Hawai'i -- Instr. Dev. Lab.

TITLE: eKLM Readout Motherboard IDL_10_009

Design:	Page Description:	REV:
GSV	TOP Block MB_eKLM_RevA	A

DATED: 31-DEC-2010 [TOP] SHEET: 1 OF 5

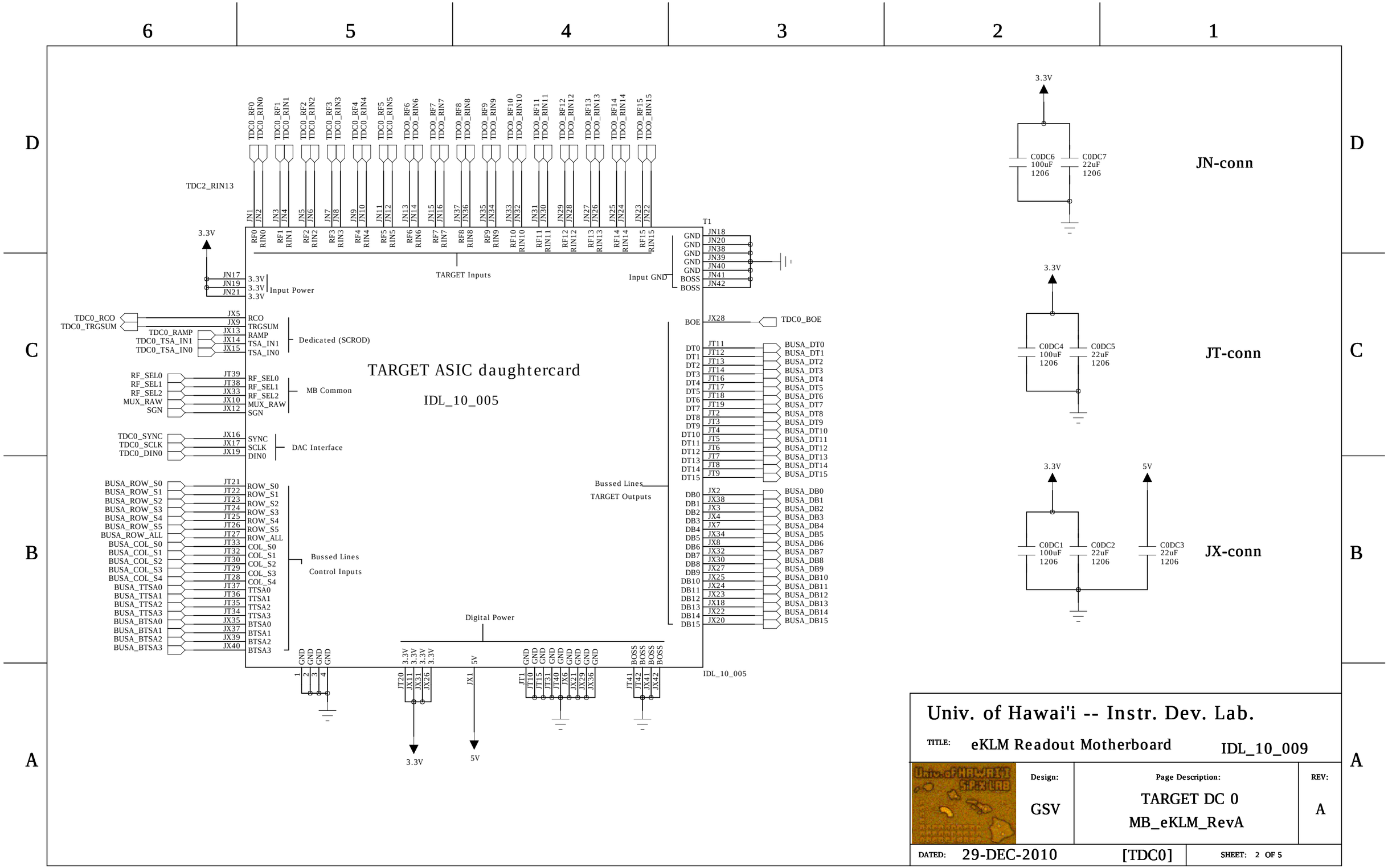

Univ. of Hawai'i -- Instr. Dev. Lab.

TITLE: eKLM Readout Motherboard IDL_10_009

Design:	Page Description:	REV:
GSV	TARGET DC 0 MB_eKLM_RevA	A

DATED: 29-DEC-2010 [TDC0] SHEET: 2 OF 5

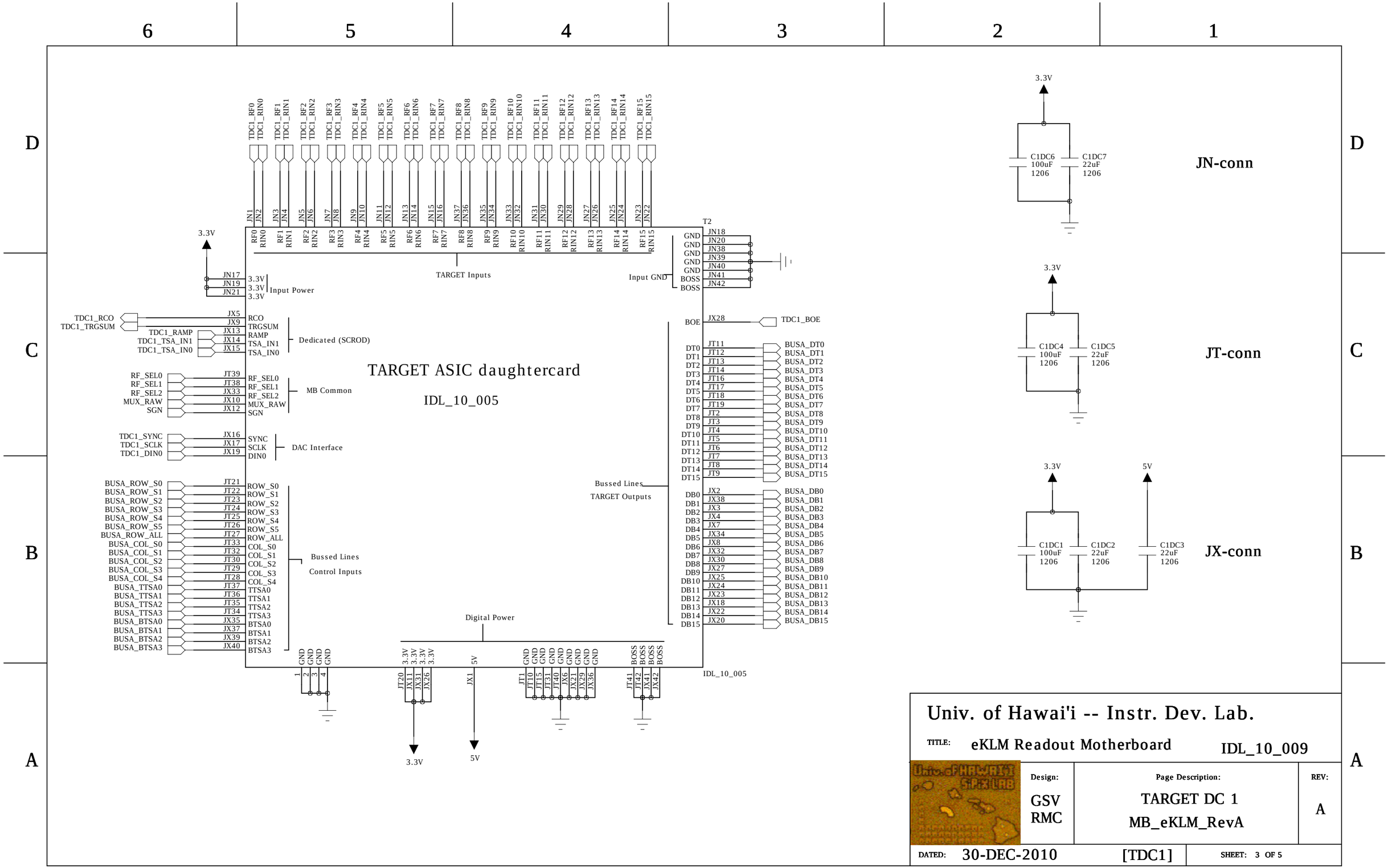

Univ. of Hawai'i -- Instr. Dev. Lab.

TITLE: eKLM Readout Motherboard IDL_10_009

Design:	Page Description:	REV:
GSV RMC	TARGET DC 1 MB_eKLM_RevA	A

DATED: 30-DEC-2010 [TDC1] SHEET: 3 OF 5

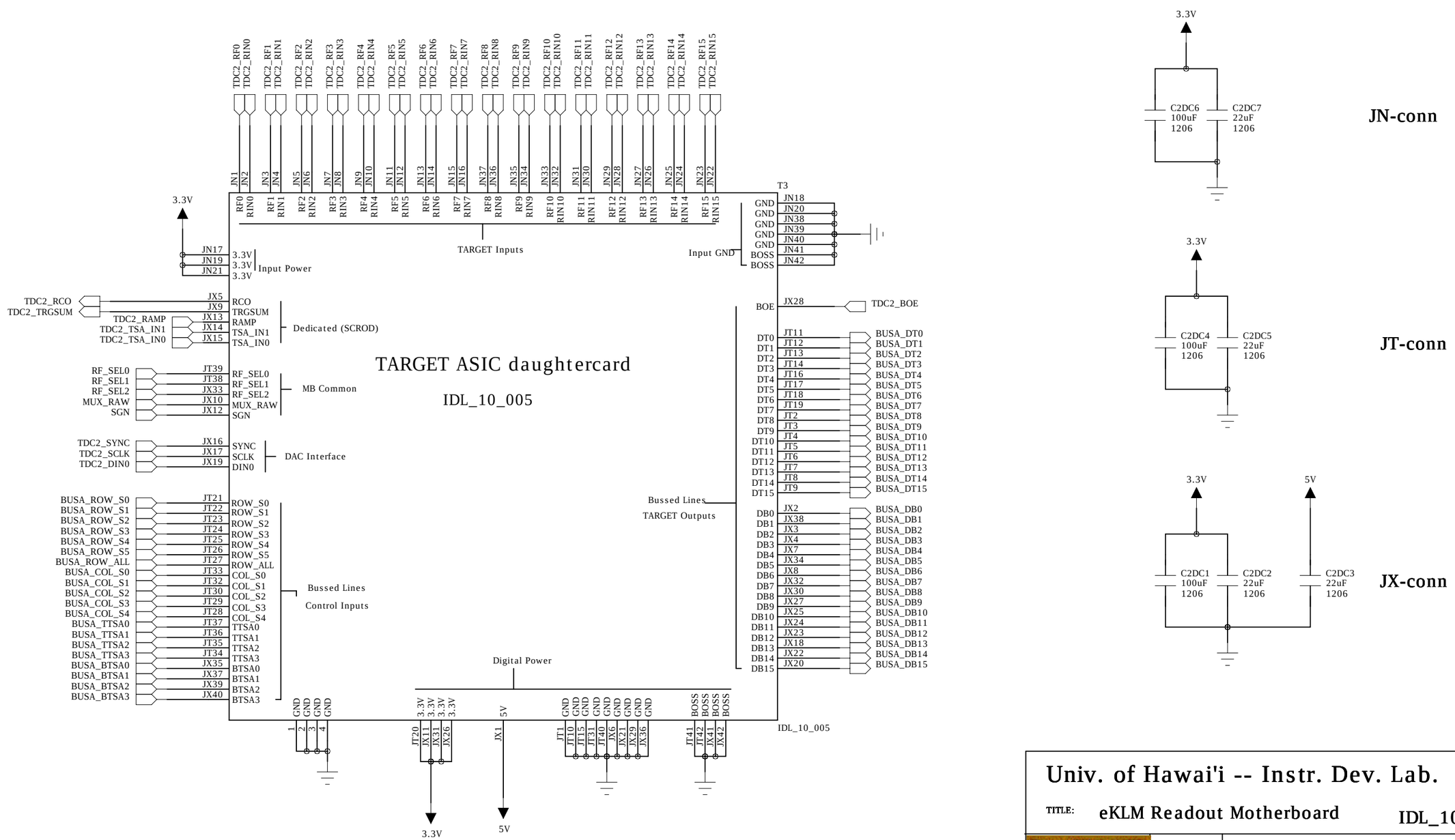

Univ. of Hawai'i -- Instr. Dev. Lab.

TITLE: eKLM Readout Motherboard IDL_10_009

Design:	Page Description:	REV:
GSV RMC	TARGET DC 2 MB_eKLM_RevA	A

DATED: 30-DEC-2010 [TDC2] SHEET: 4 OF 5

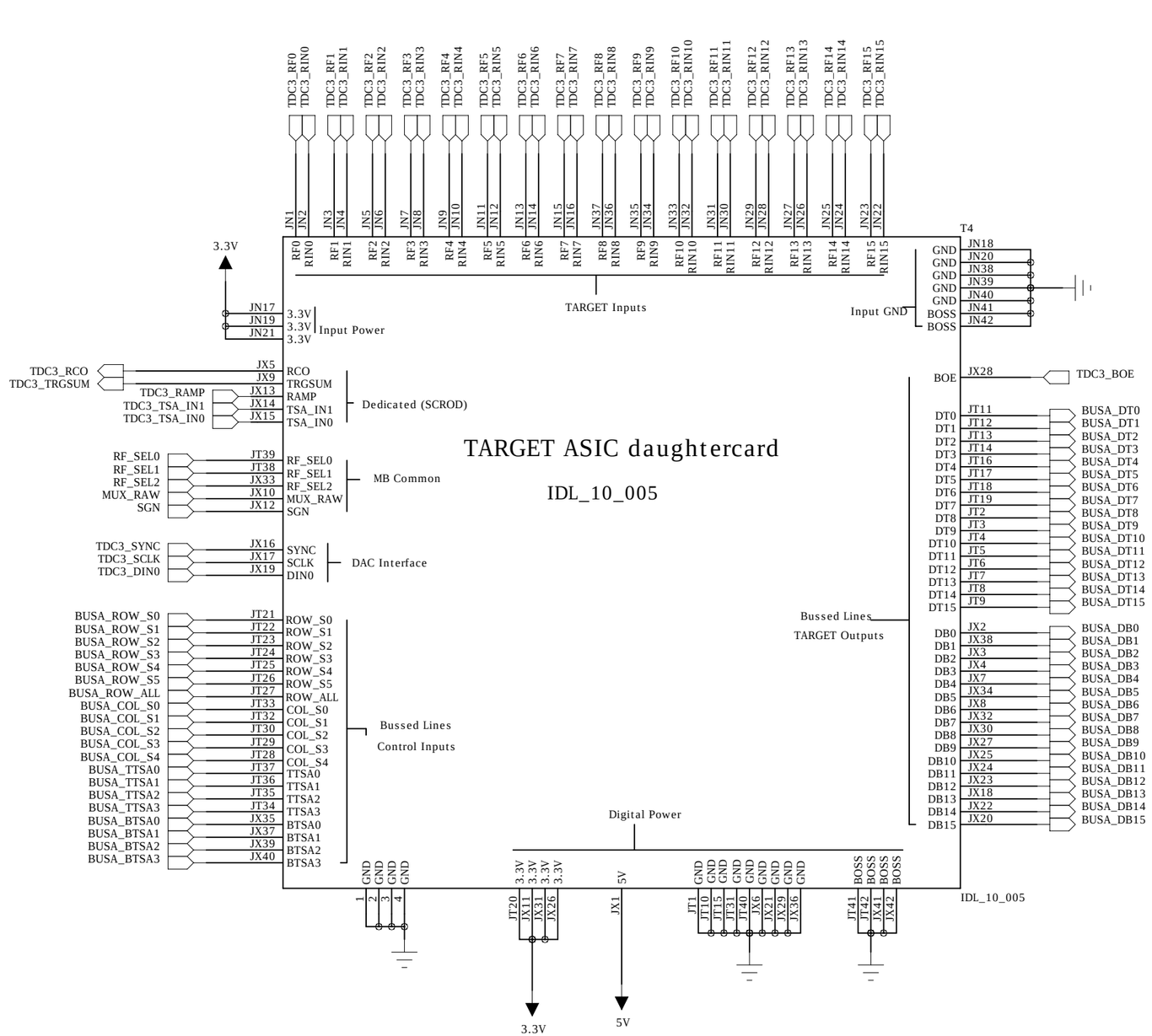

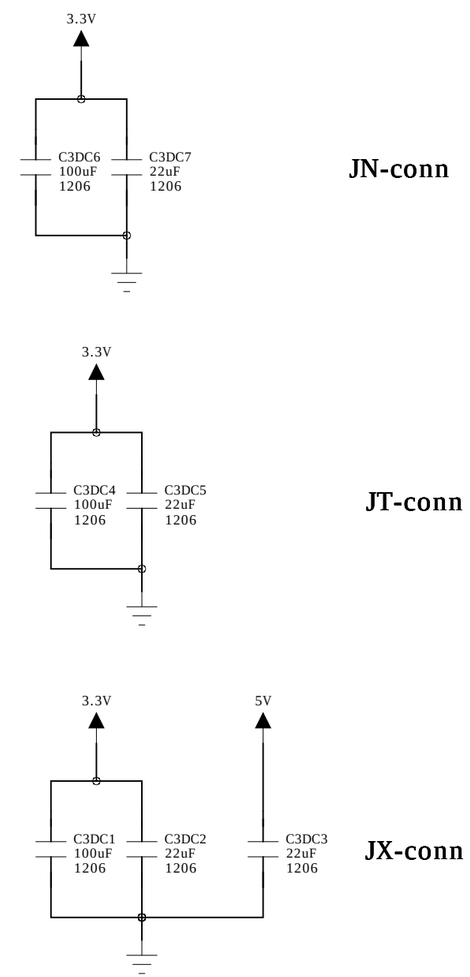

Univ. of Hawai'i -- Instr. Dev. Lab.

TITLE: eKLM Readout Motherboard IDL_10_009

	Design:	Page Description:	REV:
	GSV RMC	TARGET DC 3 MB_eKLM_RevA	A

DATED: 30-DEC-2010 [TDC3] SHEET: 5 OF 5

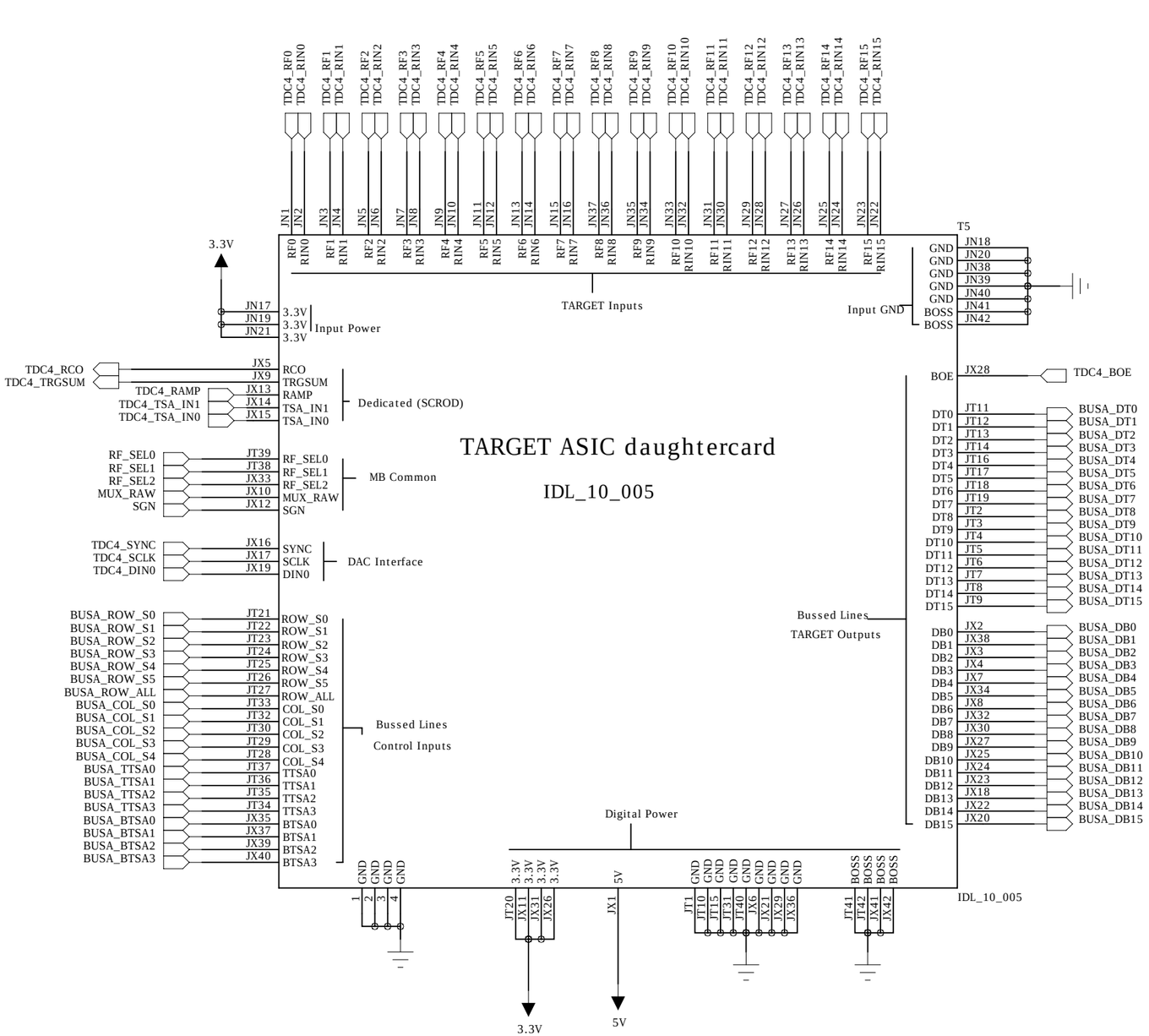

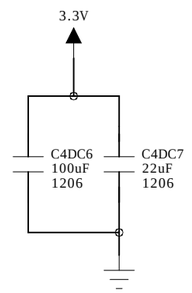

JN-conn

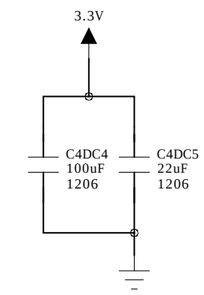

JT-conn

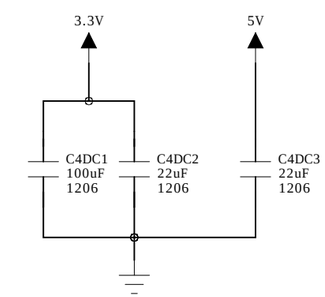

JX-conn

Univ. of Hawai'i -- Instr. Dev. Lab.

TITLE: eKLM Readout Motherboard IDL_10_009

Design:	Page Description:	REV:
GSV RMC	TARGET DC 4 MB_eKLM_RevA	A

DATED: 30-DEC-2010 [TDC4] SHEET: 6 OF 5

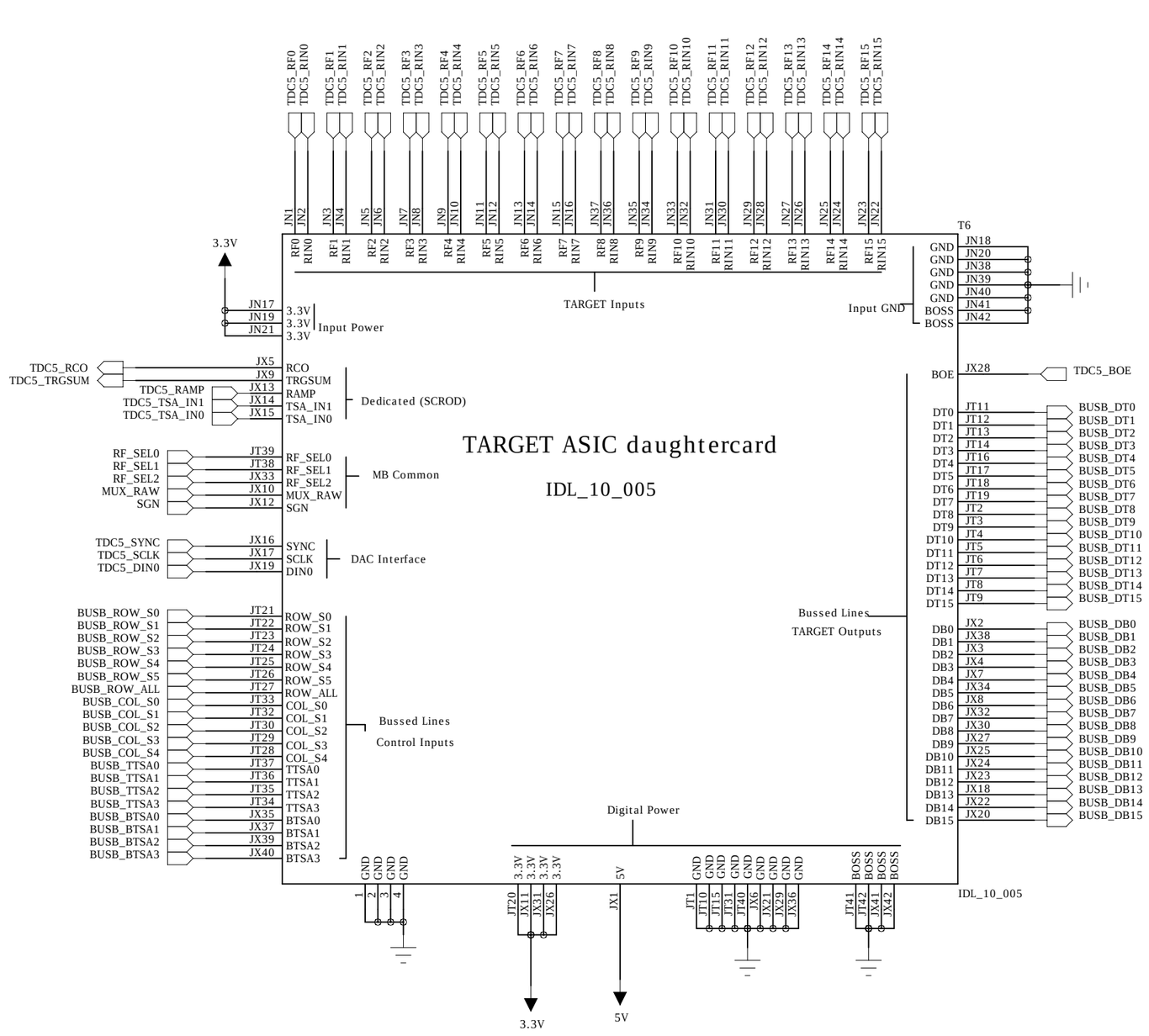

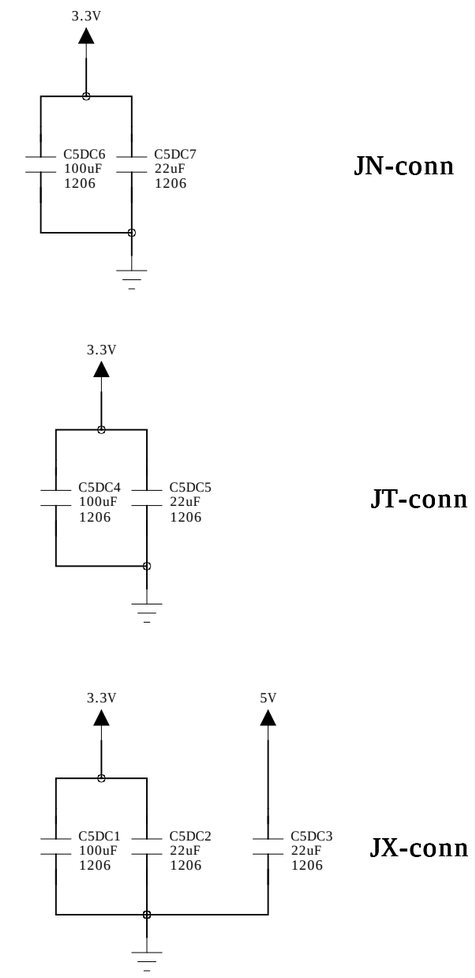

Univ. of Hawai'i -- Instr. Dev. Lab.

TITLE: eKLM Readout Motherboard IDL_10_009

Design:	Page Description:	REV:
GSV RMC	TARGET DC 5 MB_eKLM_RevA	A

DATED: 30-DEC-2010 [TDC5] SHEET: 7 OF 5

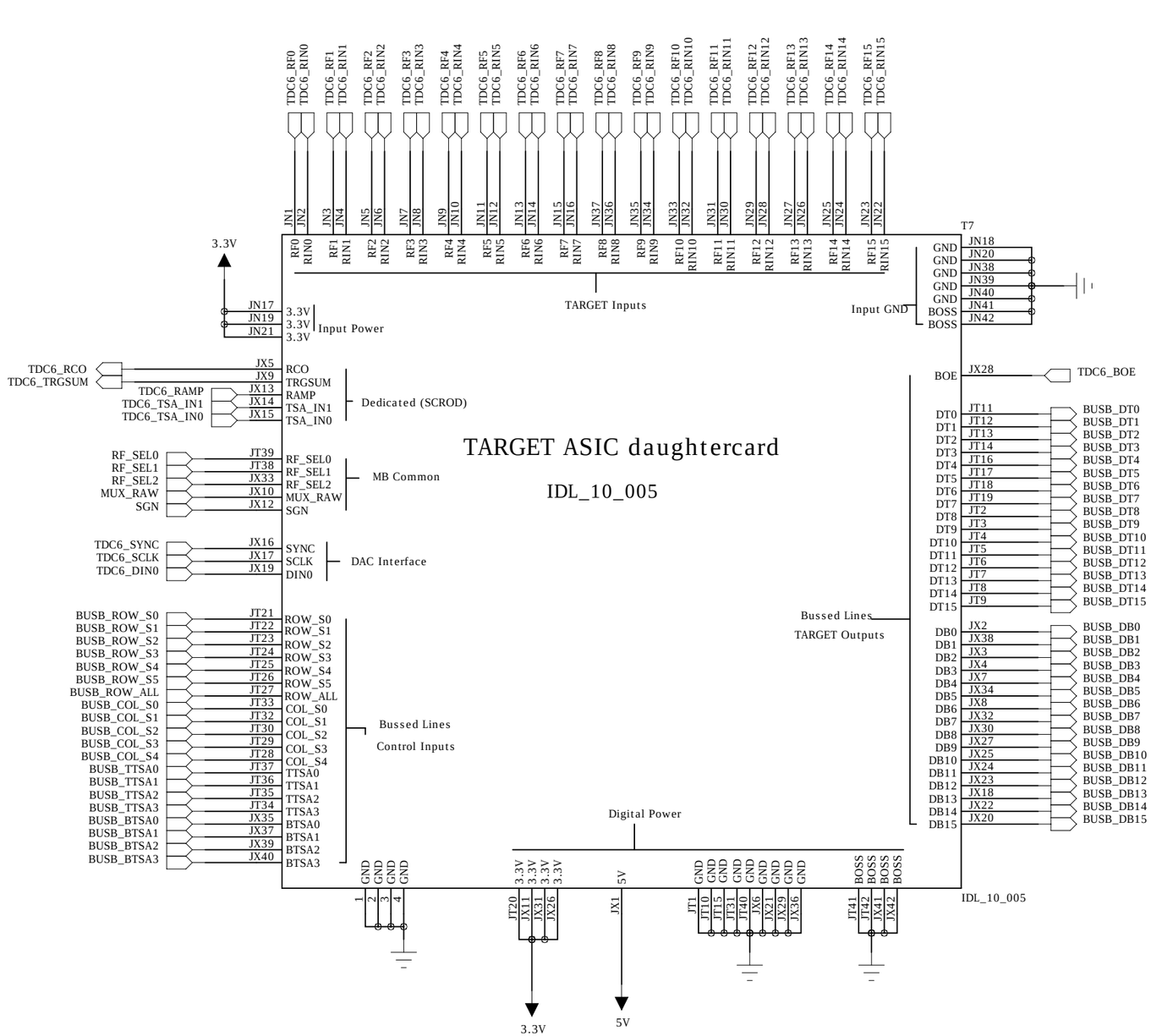

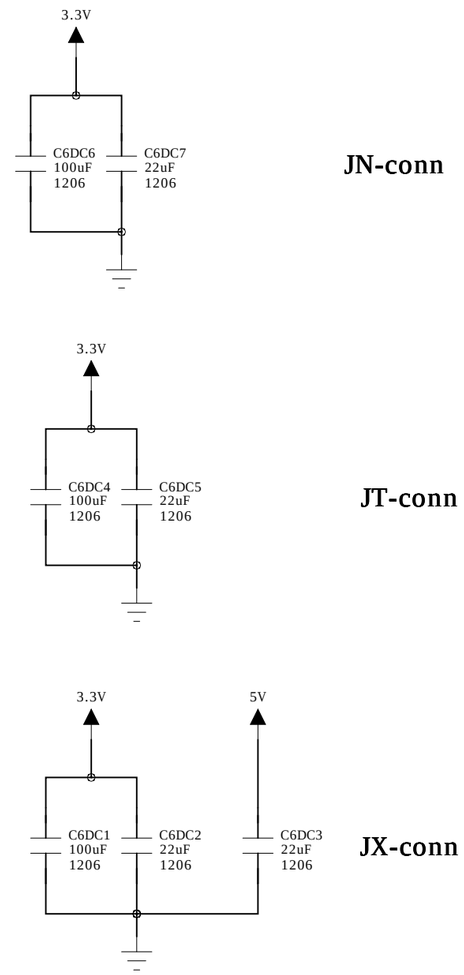

Univ. of Hawai'i -- Instr. Dev. Lab.

TITLE: eKLM Readout Motherboard IDL_10_009

Design:	Page Description:	REV:
GSV RMC	TARGET DC 6 MB_eKLM_RevA	A

DATED: 30-DEC-2010 [TDC6] SHEET: 8 OF 5

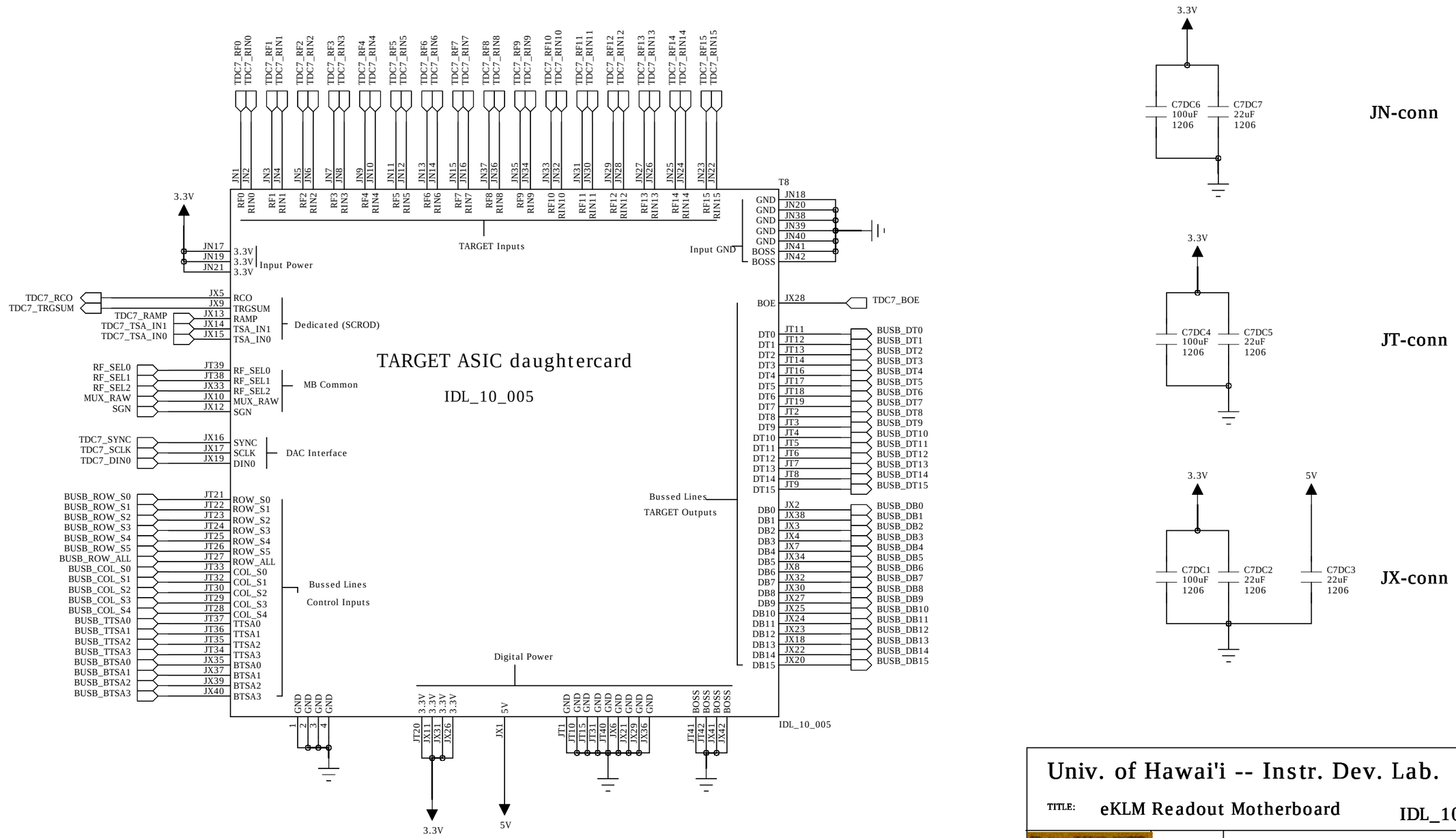

Univ. of Hawai'i -- Instr. Dev. Lab.

TITLE: eKLM Readout Motherboard IDL_10_009

Design:	Page Description:	REV:
GSV RMC	TARGET DC 7 MB_eKLM_RevA	A

DATED: 30-DEC-2010 [TDC7] SHEET: 9 OF 5

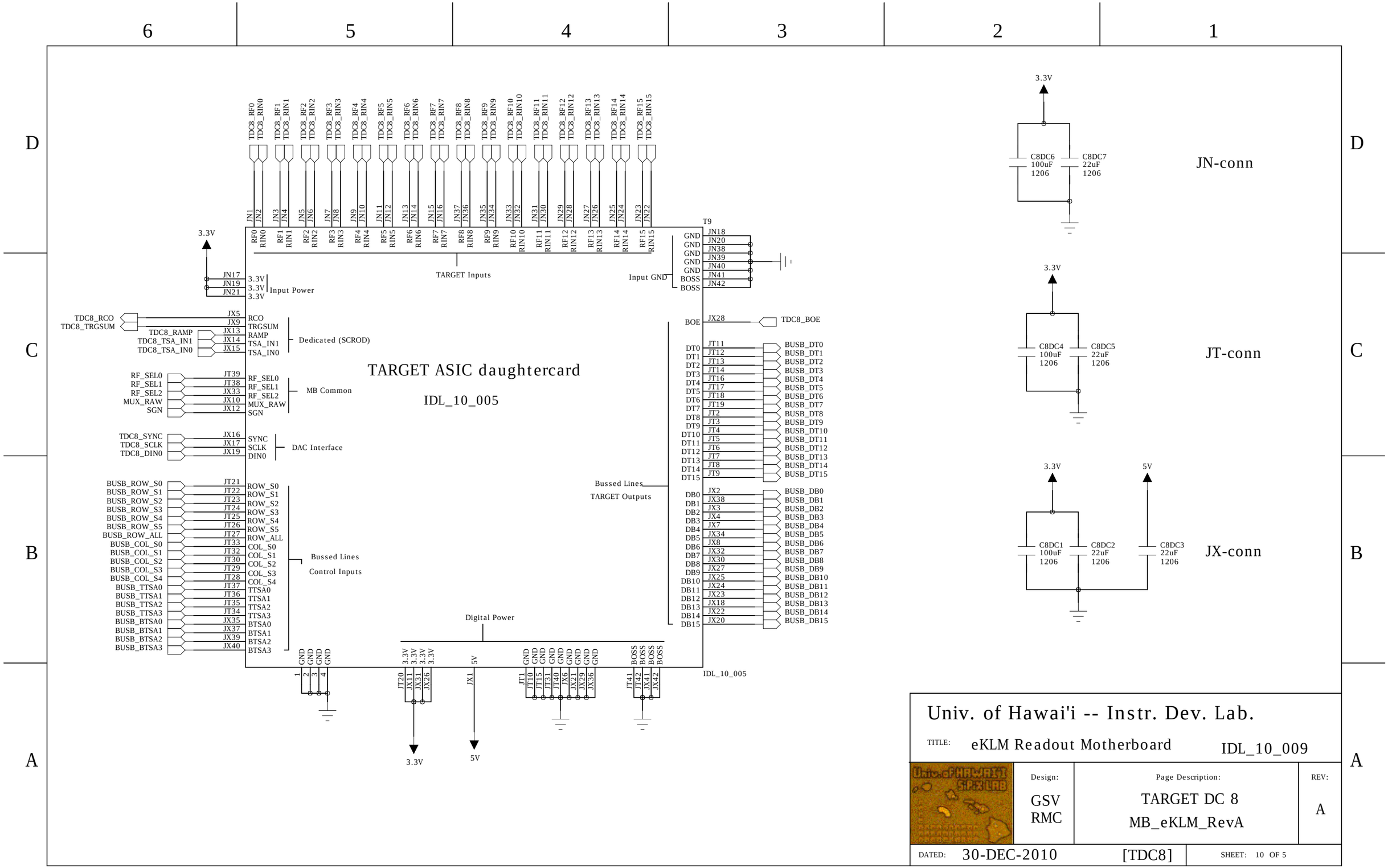
TARGET ASIC daughtercard
IDL_10_005
TARGET Inputs
Input Power
Dedicated (SCROD)
MB Common
DAC Interface
Bussed Lines
Control Inputs
Input GND
Bussed Lines
TARGET Outputs
Digital Power
T9
IDL_10_005
JN-conn
JT-conn
JX-conn
C8DC6 100uF 1206
C8DC7 22uF 1206
C8DC4 100uF 1206
C8DC5 22uF 1206
C8DC1 100uF 1206
C8DC2 22uF 1206
C8DC3 22uF 1206
3.3V
5V
Univ. of Hawai'i -- Instr. Dev. Lab.
TITLE: eKLM Readout Motherboard
IDL_10_009
Design: GSV RMC
Page Description: TARGET DC 8 MB_eKLM_RevA
REV: A
DATED: 30-DEC-2010
[TDC8]
SHEET: 10 OF 5

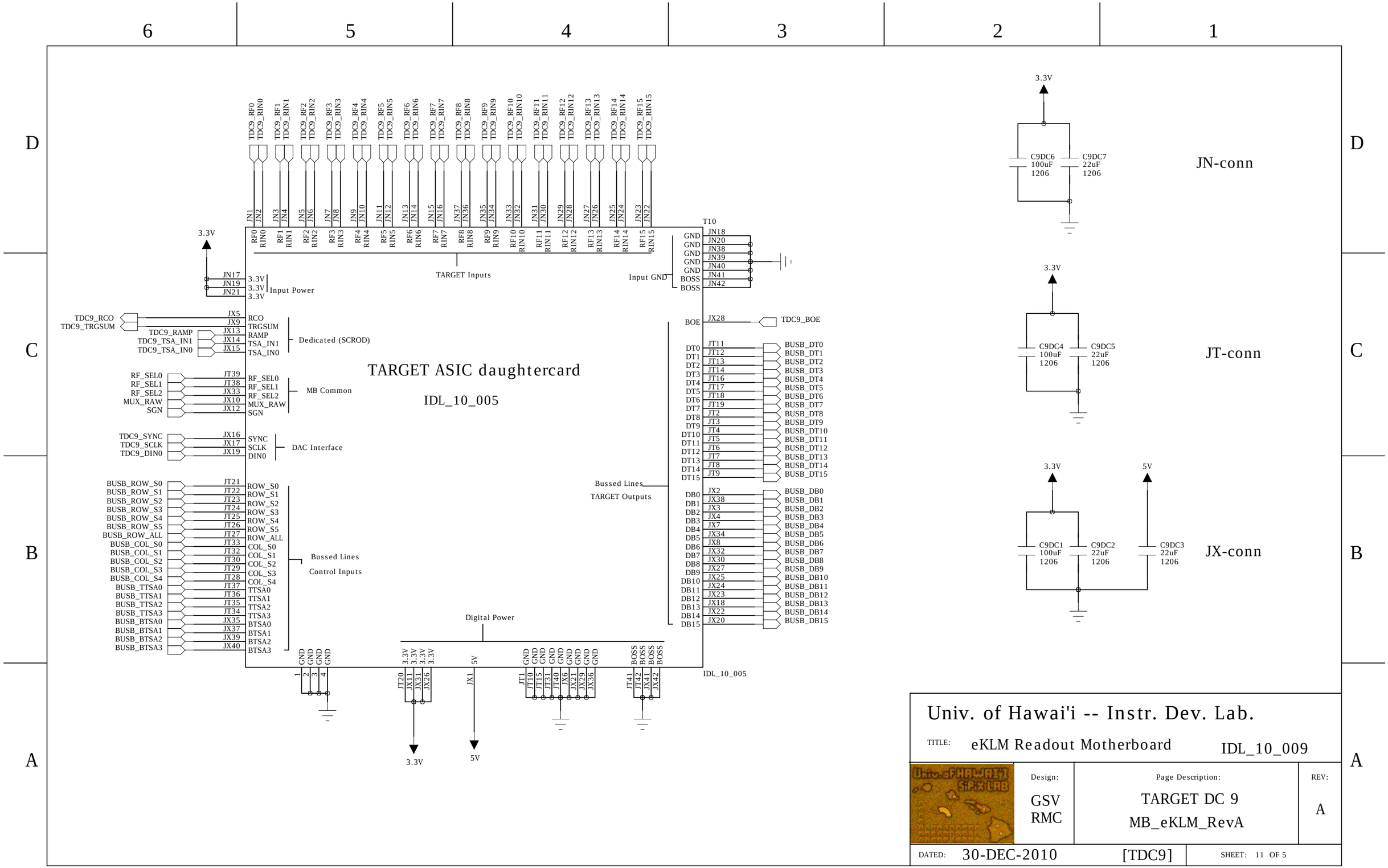

Univ. of Hawai'i -- Instr. Dev. Lab.

TITLE: eKLM Readout Motherboard IDL_10_009

Design:	Page Description:	REV:
GSV RMC	TARGET DC 9 MB_eKLM_RevA	A

DATED: 30-DEC-2010 [TDC9] SHEET: 11 OF 5

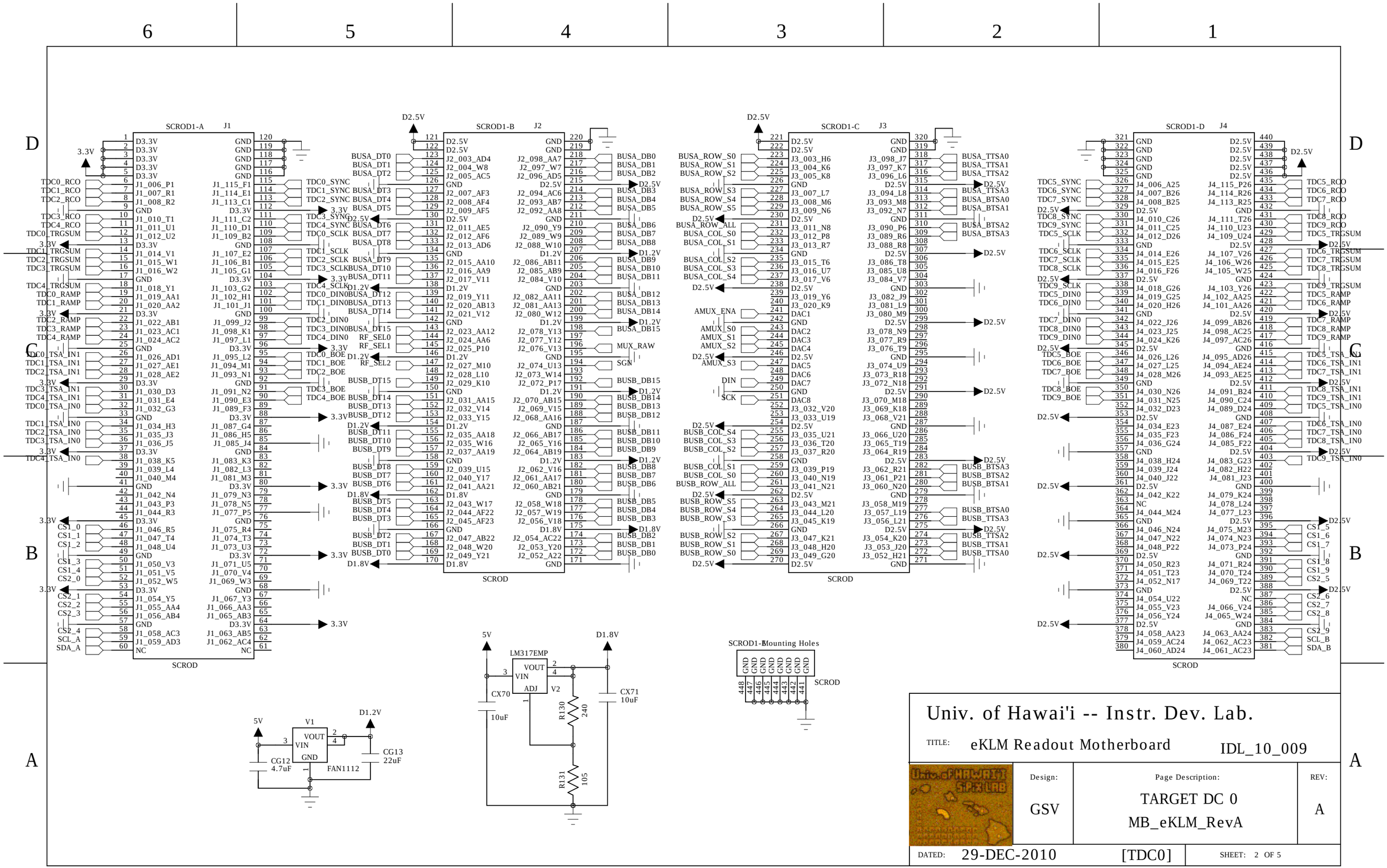
6
5
4
3
2
1
D
C
B
A
SCROD1-A J1
SCROD1-B J2
SCROD1-C J3
SCROD1-D J4
SCROD
SCROD1-Mounting Holes
LM317EMP
VOUT
VIN
ADJ
V2
CX70
10uF
CX71
10uF
R130
240
R131
105
5V
D1.8V
V1
GND
FAN1112
CG12
4.7uF
CG13
22uF
D1.2V
D2.5V
3.3V
Univ. of Hawai'i -- Instr. Dev. Lab.
TITLE:
eKLM Readout Motherboard
IDL_10_009
Design:
GSV
Page Description:
TARGET DC 0
MB_eKLM_RevA
REV:
A
DATED:
29-DEC-2010
[TDC0]
SHEET: 2 OF 5

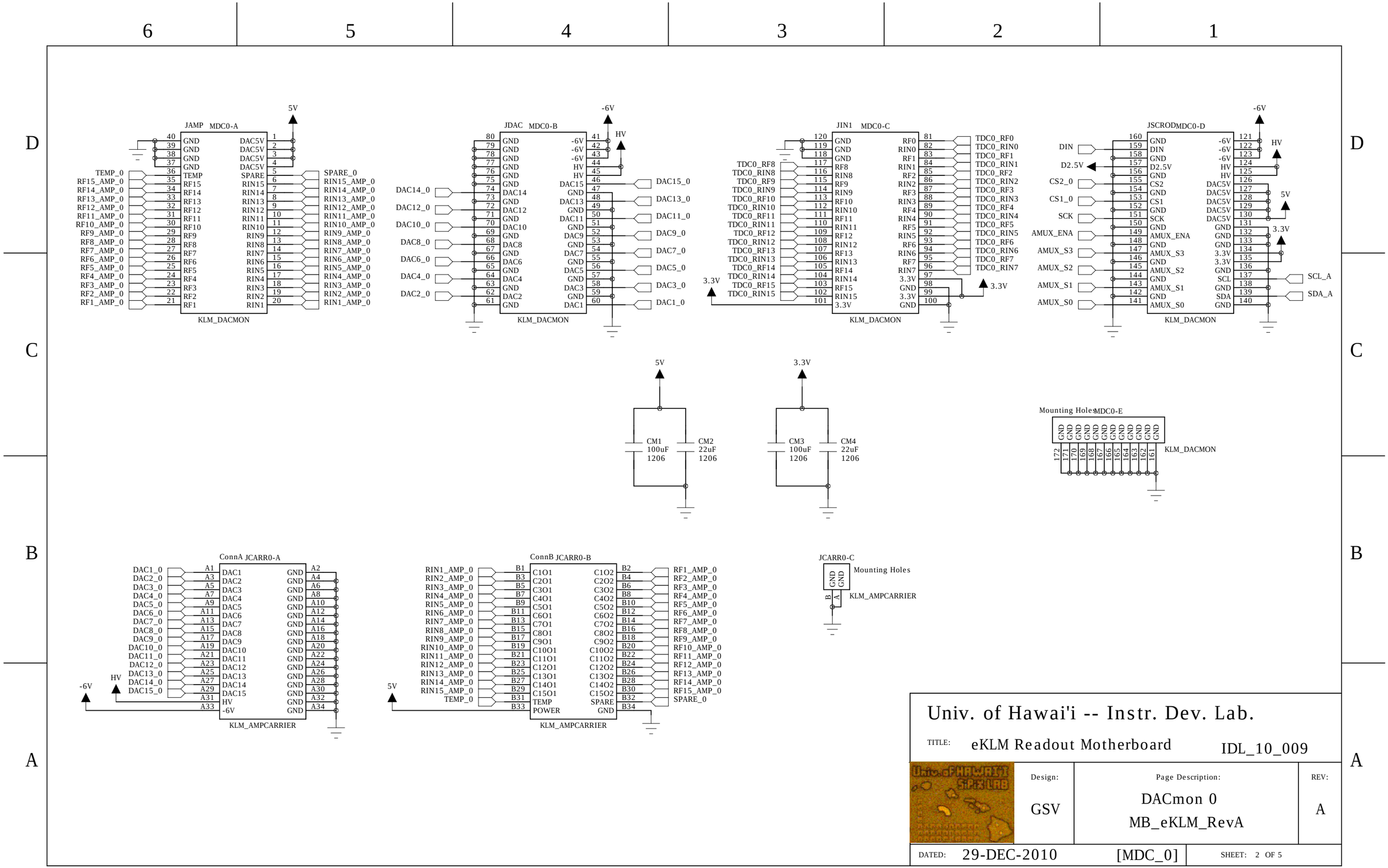
6
5
4
3
2
1
D
C
B
A
JAMP MDC0-A
KLM_DACMON
JDAC MDC0-B
KLM_DACMON
JIN1 MDC0-C
KLM_DACMON
JSCROD MDC0-D
KLM_DACMON
CM1 100uF 1206
CM2 22uF 1206
CM3 100uF 1206
CM4 22uF 1206
Mounting Holes MDC0-E
KLM_DACMON
ConnA JCARR0-A
KLM_AMPCARRIER
ConnB JCARR0-B
KLM_AMPCARRIER
JCARR0-C
Mounting Holes
KLM_AMPCARRIER
Univ. of Hawai'i -- Instr. Dev. Lab.
TITLE: eKLM Readout Motherboard
IDL_10_009
Design: GSV
Page Description: DACmon 0
MB_eKLM_RevA
REV: A
DATED: 29-DEC-2010
[MDC_0]
SHEET: 2 OF 5

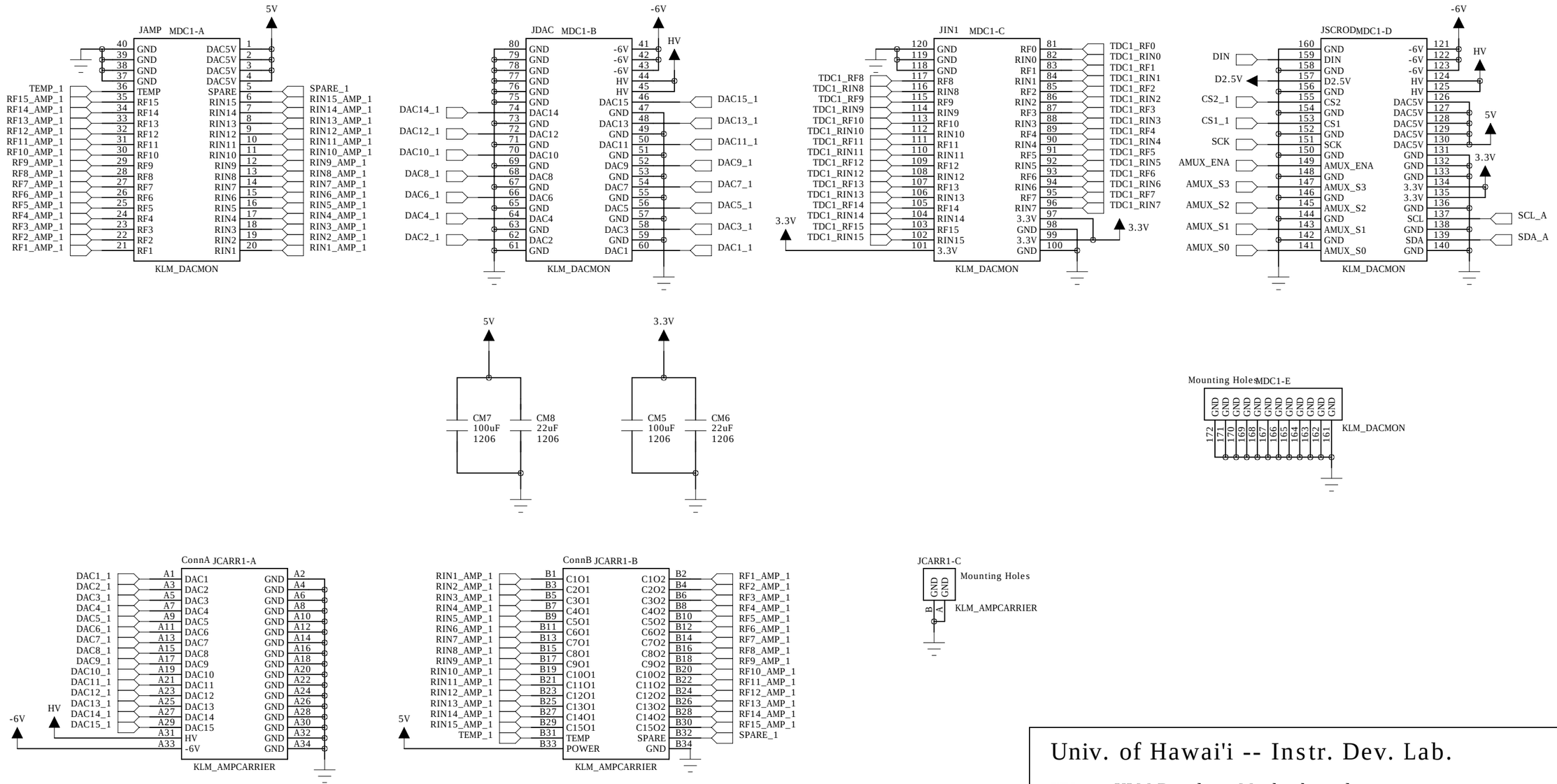

Univ. of Hawai'i -- Instr. Dev. Lab.

TITLE: eKLM Readout Motherboard IDL_10_009

Design:	Page Description:	REV:
GSV	DACmon 1 MB_eKLM_RevA	A

DATED: 29-DEC-2010 [MDC_1] SHEET: 2 OF 5

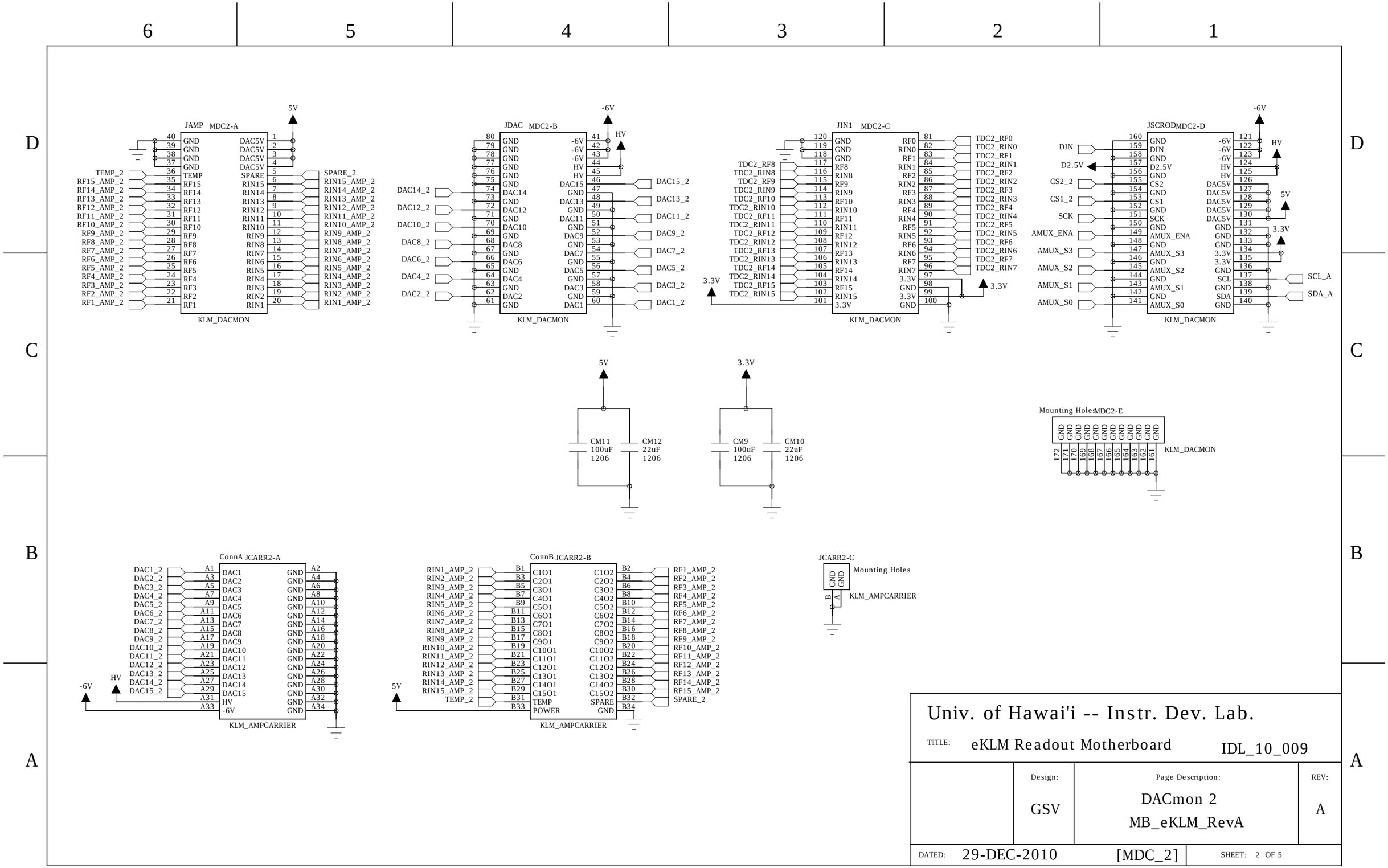

Univ. of Hawai'i -- Instr. Dev. Lab.

TITLE: eKLM Readout Motherboard IDL_10_009

Design:	Page Description:	REV:
GSV	DACmon 2 MB_eKLM_RevA	A

DATED: 29-DEC-2010 [MDC_2] SHEET: 2 OF 5

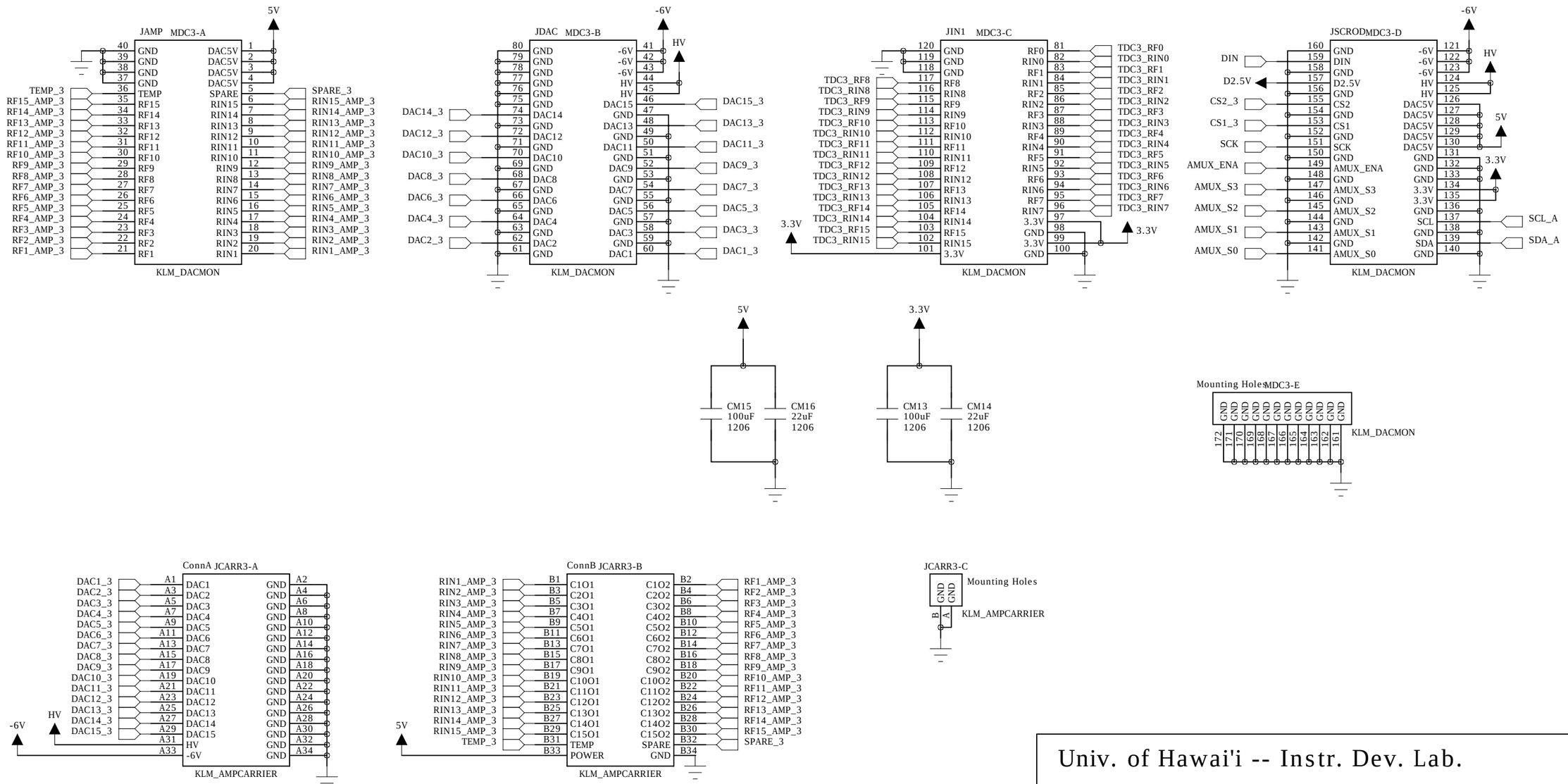

Univ. of Hawai'i -- Instr. Dev. Lab.

TITLE: eKLM Readout Motherboard IDL_10_009

Design:	Page Description:	REV:
GSV	DACmon 3 MB_eKLM_RevA	A

DATED: 29-DEC-2010 [MDC_3] SHEET: 2 OF 5

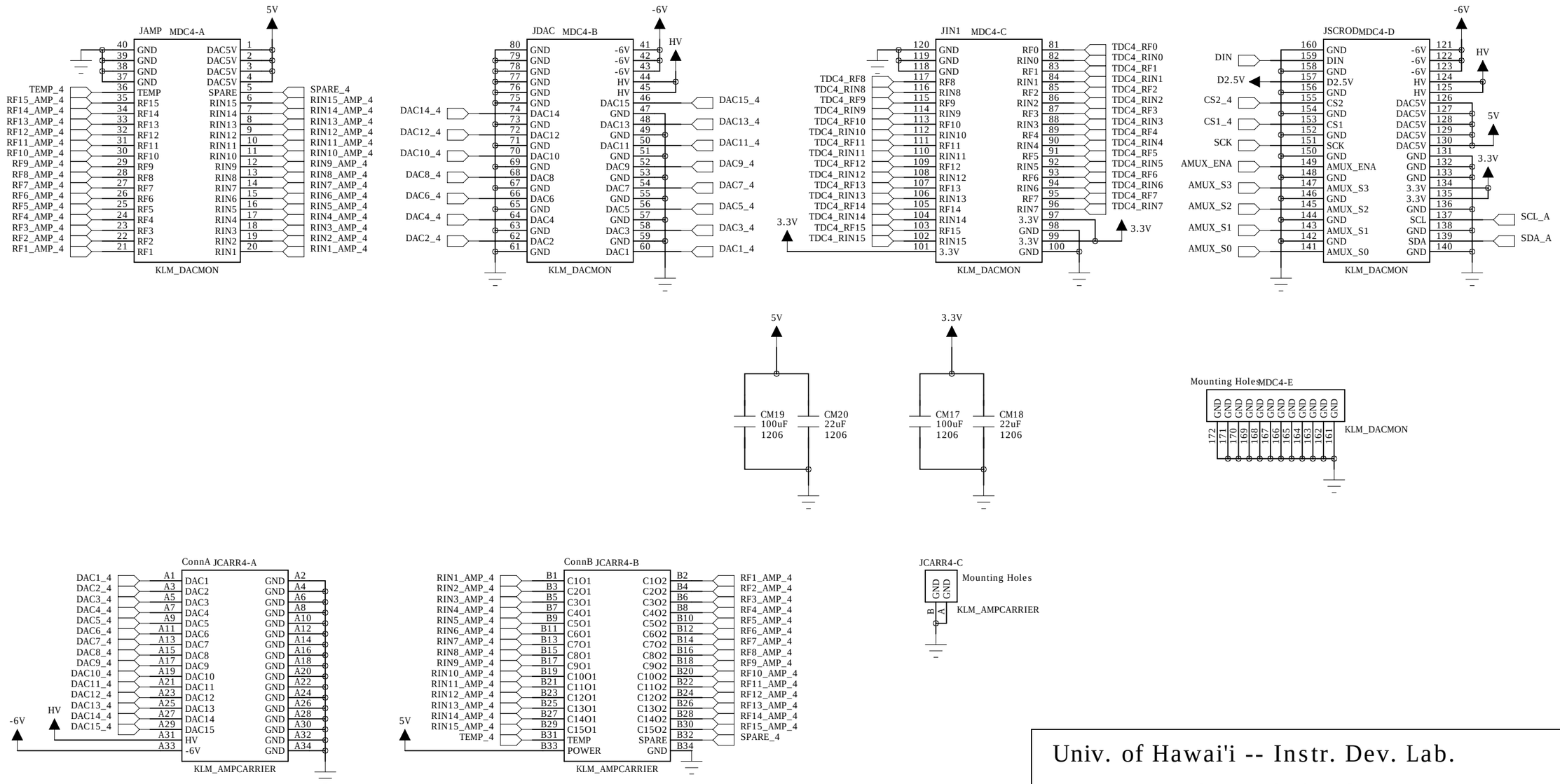

Univ. of Hawai'i -- Instr. Dev. Lab.

TITLE: eKLM Readout Motherboard IDL_10_009

Design:	Page Description:	REV:
GSV	DACmon 4 MB_eKLM_RevA	A

DATED: 29-DEC-2010 [MDC_4] SHEET: 2 OF 5

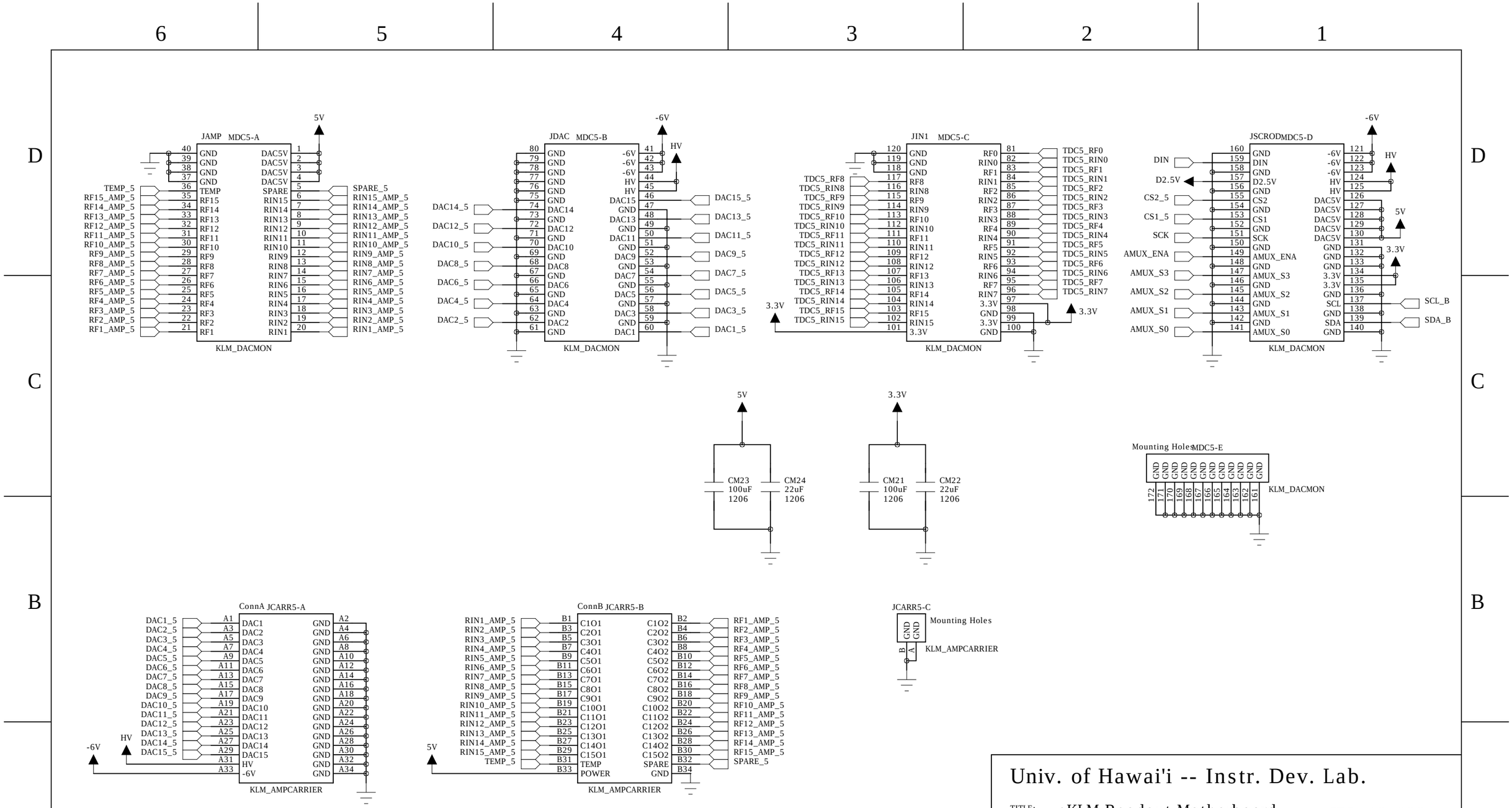

Univ. of Hawai'i -- Instr. Dev. Lab.

TITLE: eKLM Readout Motherboard IDL_10_009

Design:	Page Description:	REV:
GSV	DACmon 5 MB_eKLM_RevA	A

DATED: 29-DEC-2010 [MDC_5] SHEET: 2 OF 5

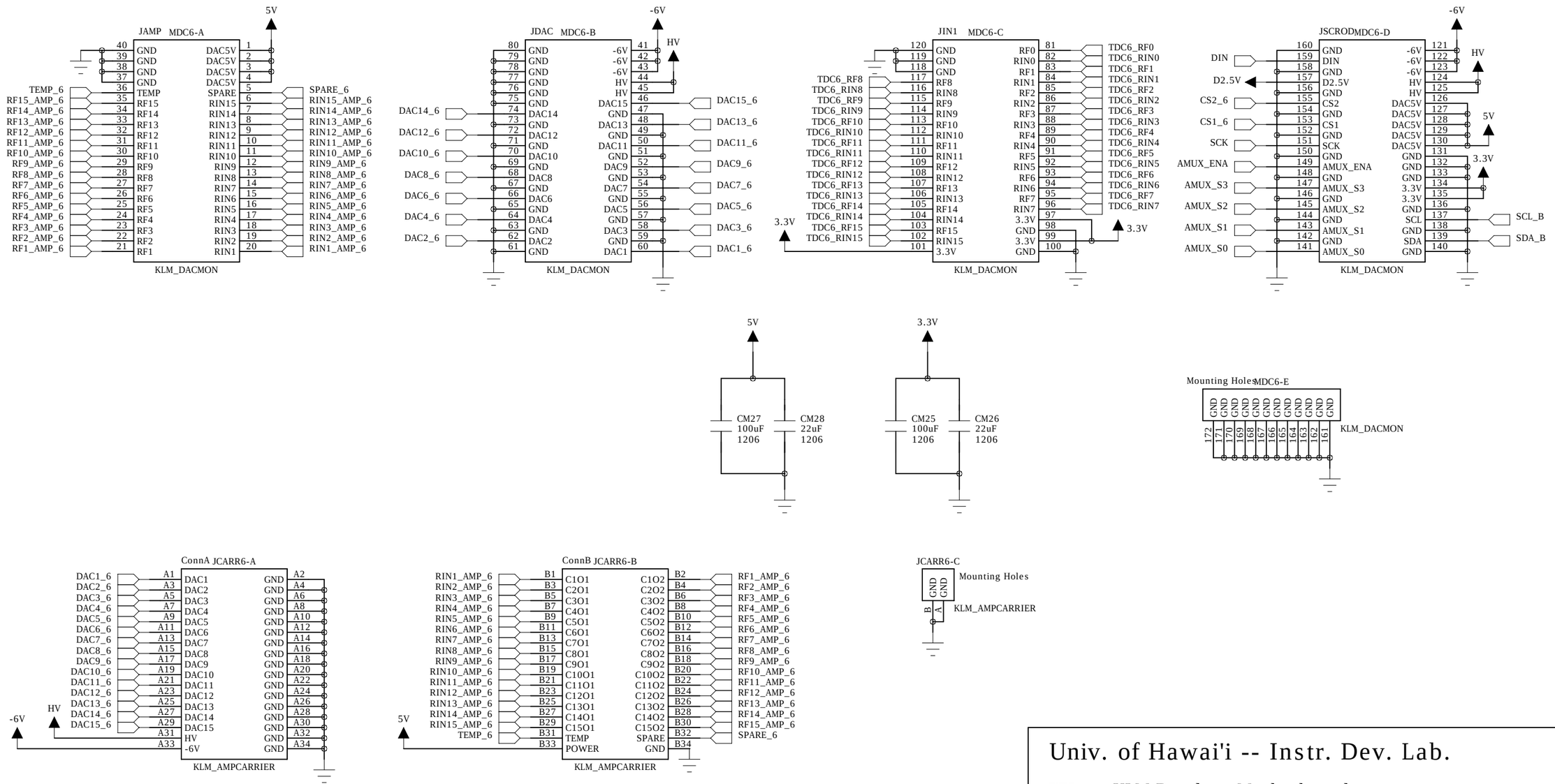

Univ. of Hawai'i -- Instr. Dev. Lab.

TITLE: eKLM Readout Motherboard IDL_10_009

Design:	Page Description:	REV:
GSV	DACmon 6 MB_eKLM_RevA	A

DATED: 29-DEC-2010 [MDC_6] SHEET: 2 OF 5

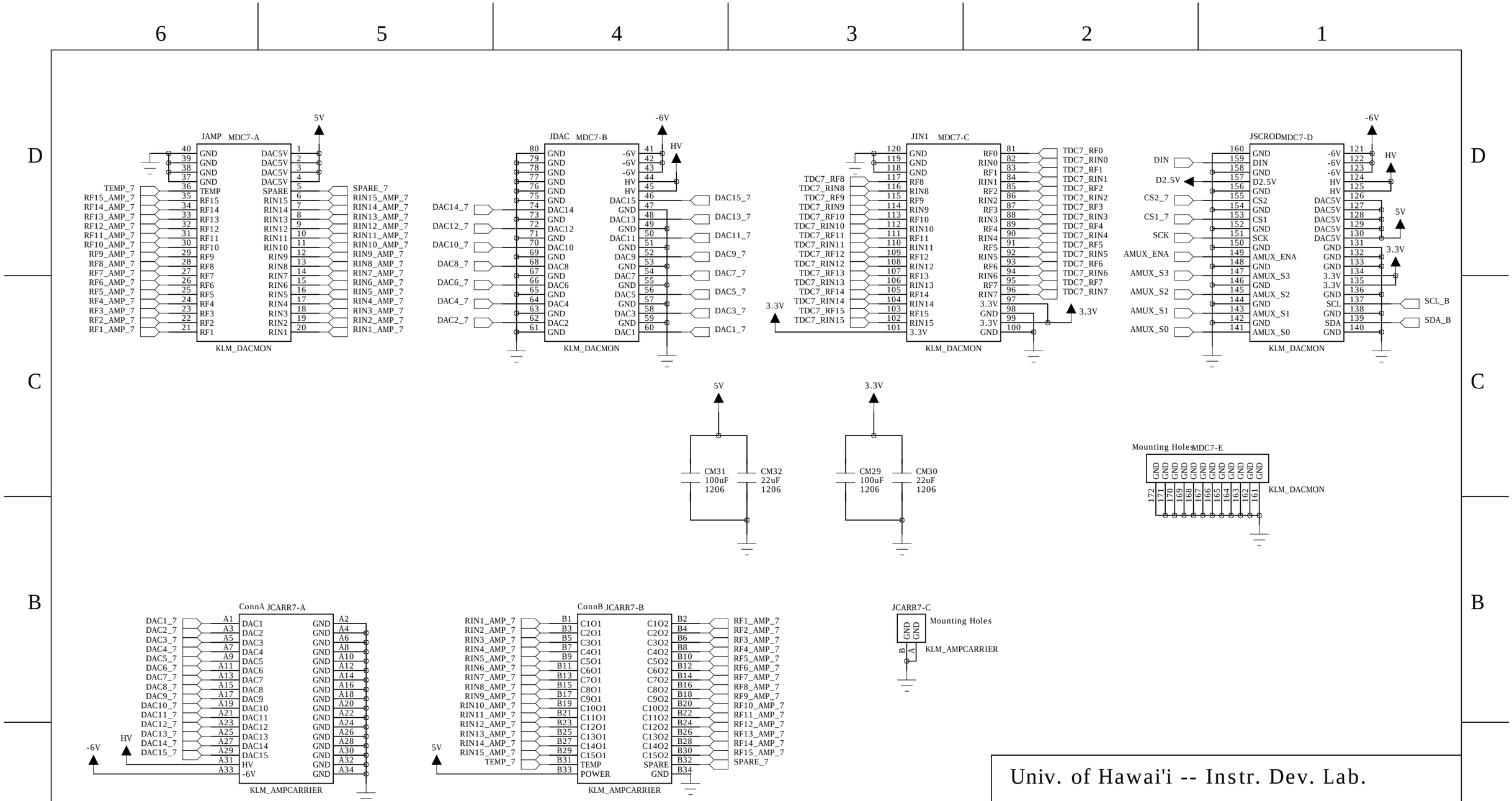

Univ. of Hawai'i -- Instr. Dev. Lab.

TITLE: eKLM Readout Motherboard IDL_10_009

Design:	Page Description:	REV:
GSV	DACmon 7 MB_eKLM_RevA	A

DATED: 29-DEC-2010 [MDC_7] SHEET: 2 OF 5

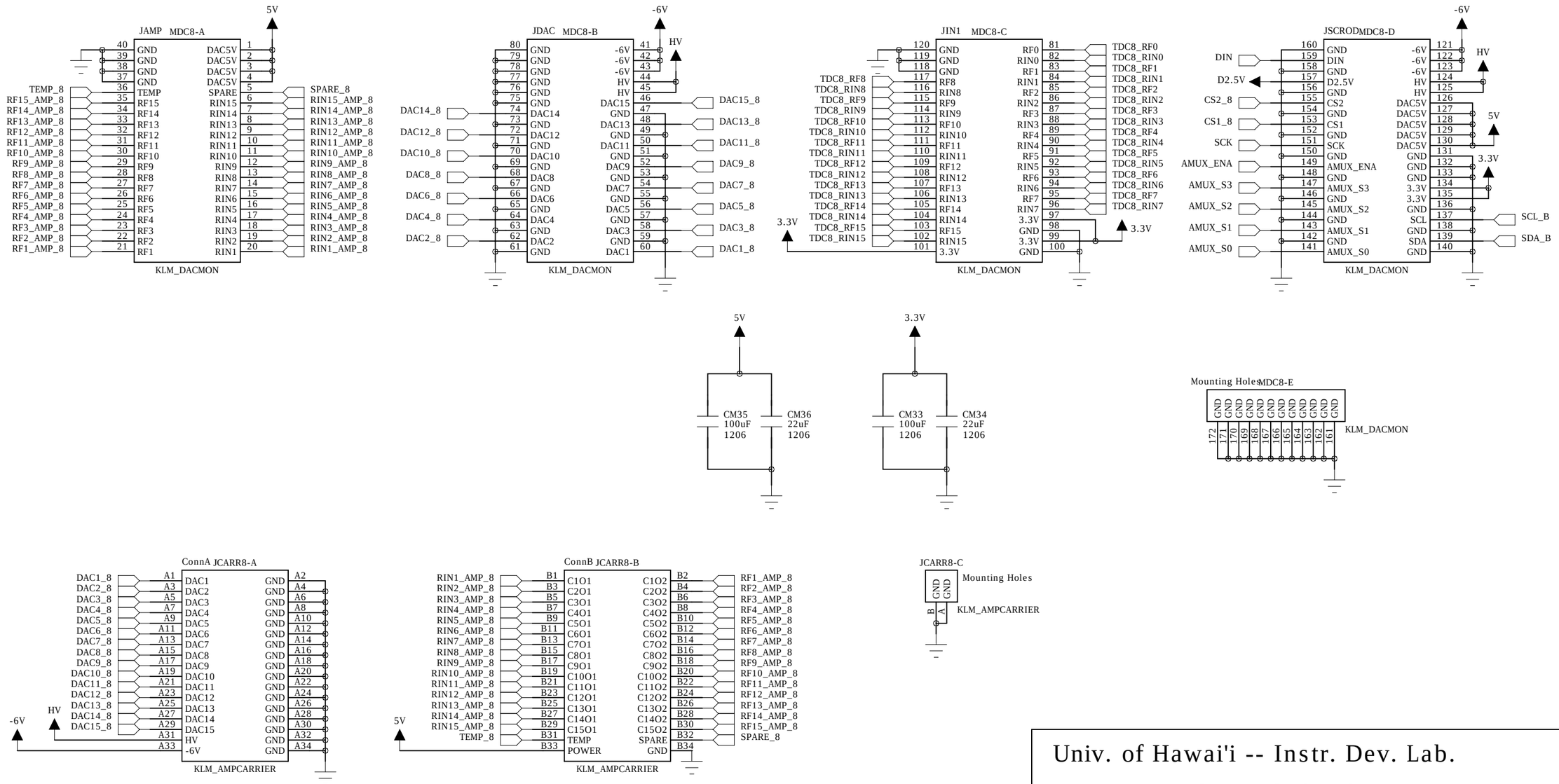

Univ. of Hawai'i -- Instr. Dev. Lab.

TITLE: eKLM Readout Motherboard IDL_10_009

Design:	Page Description:	REV:
GSV	DACmon 8 MB_eKLM_RevA	A

DATED: 29-DEC-2010 [MDC_8] SHEET: 2 OF 5

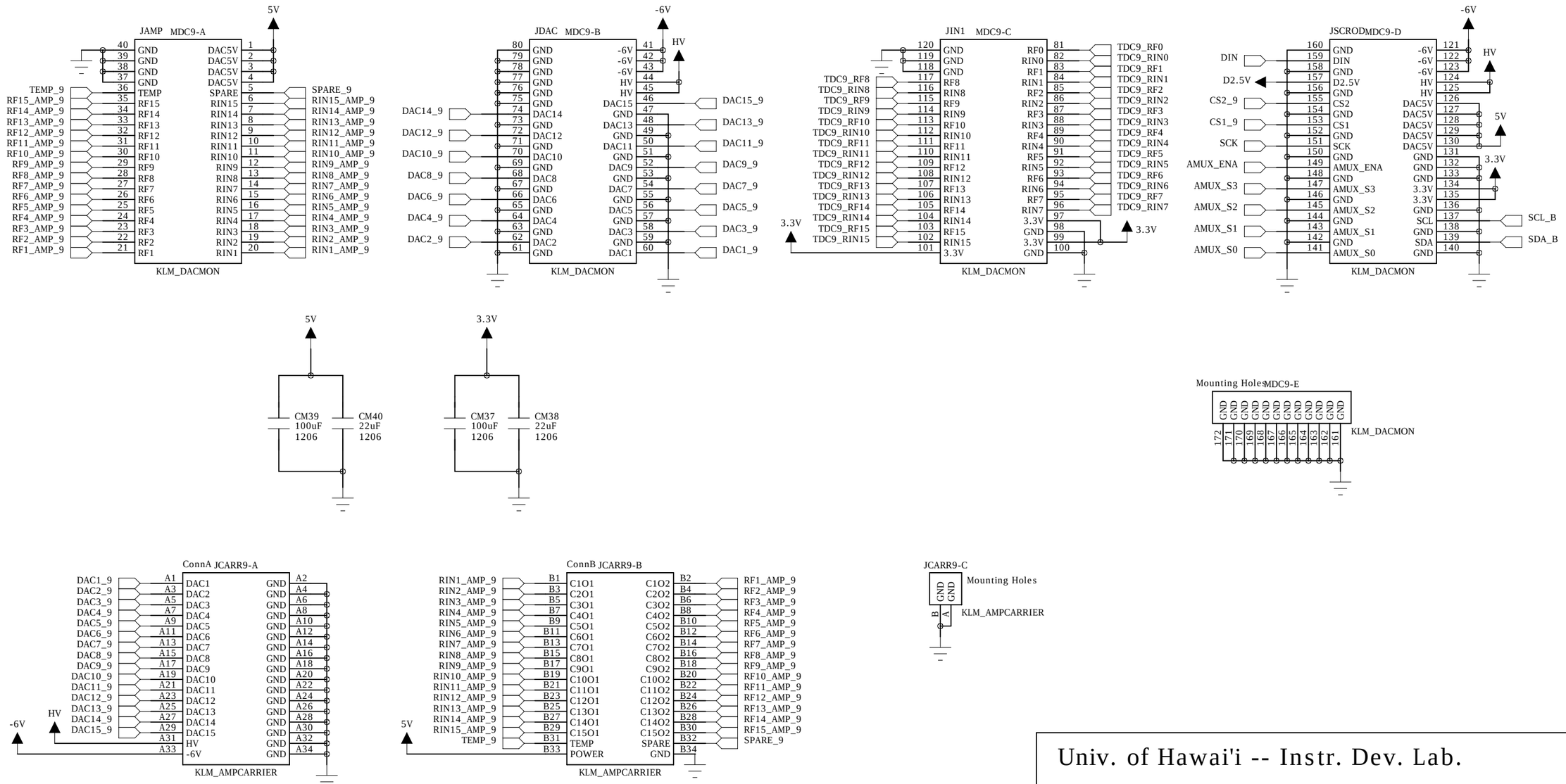

Univ. of Hawai'i -- Instr. Dev. Lab.

TITLE: eKLM Readout Motherboard IDL_10_009

Design:	Page Description:	REV:
GSV	DACmon 9 MB_eKLM_RevA	A

DATED: 29-DEC-2010 [MDC_9] SHEET: 2 OF 5

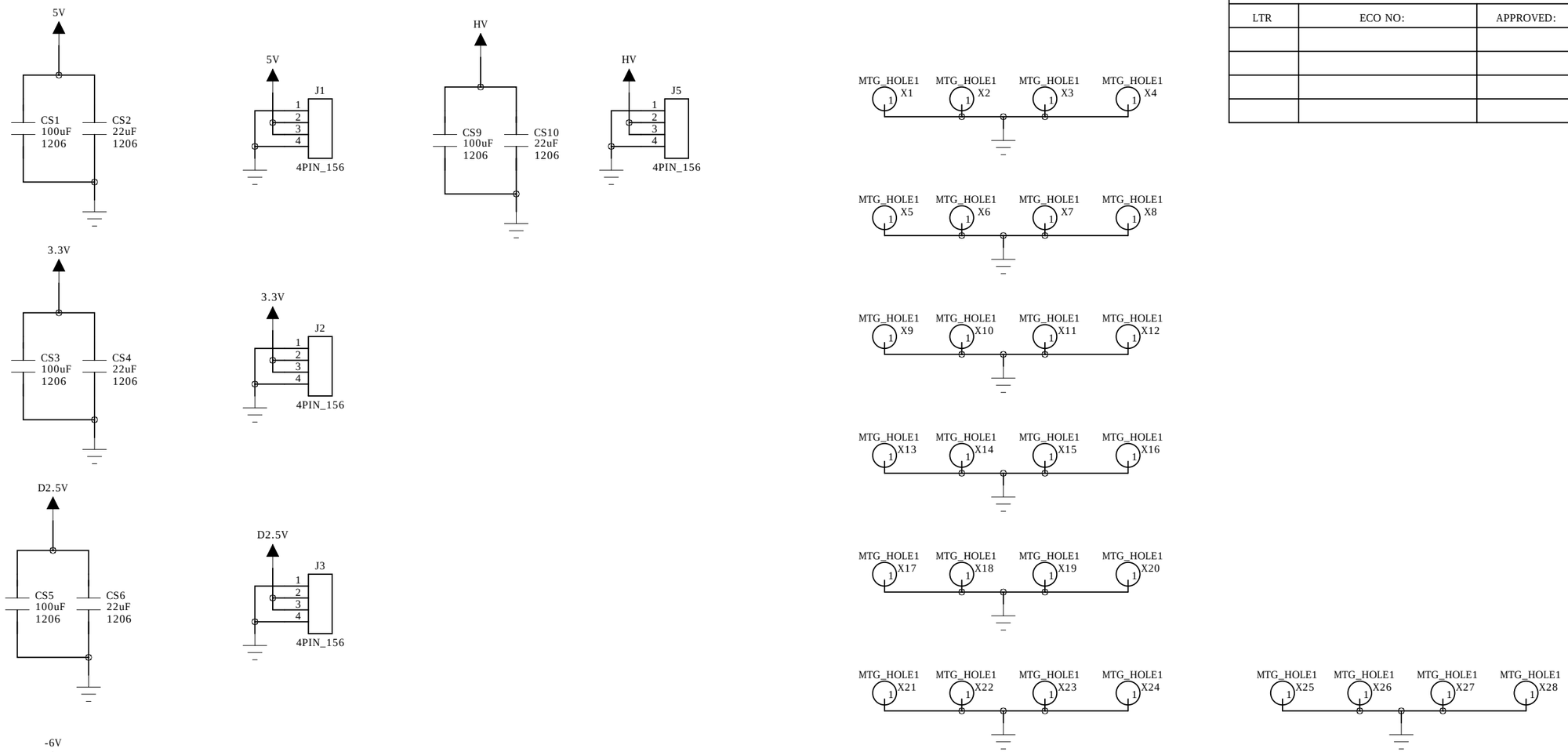

REVISION RECORD			
LTR	ECO NO:	APPROVED:	DATE:

DRAWN: <Drawn By>	DATED: <Drawn Date>
CHECKED: <Checked By>	DATED: <Checked Date>
QUALITY CONTROL: <QC By>	DATED: <QC Date>
RELEASED: <Released By>	DATED: <Release Date>

COMPANY: <Company Name>

TITLE: <Title>

CODE:	SIZE:	DRAWING NO:	REV:
<Code>	B	<Drawing Number>	<Revision>

SCALE: <Scale>

SHEET: 23 OF 23