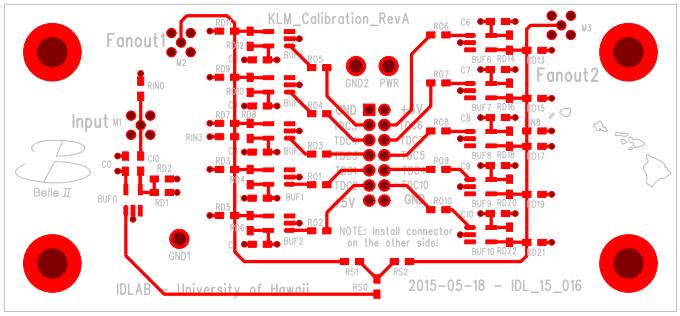
KLM_Calibration_RevA
Fanout1
Fanout2
Input
Belle II
GND1
GND2
PWR
NOTE: Install connector
on the other side!
IDLAB - University of Hawaii
2015-05-18 - IDL_15_016

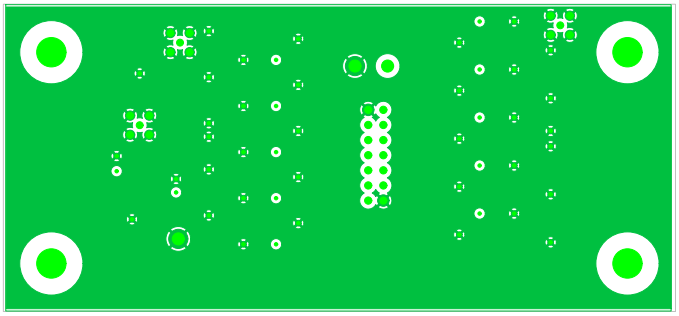

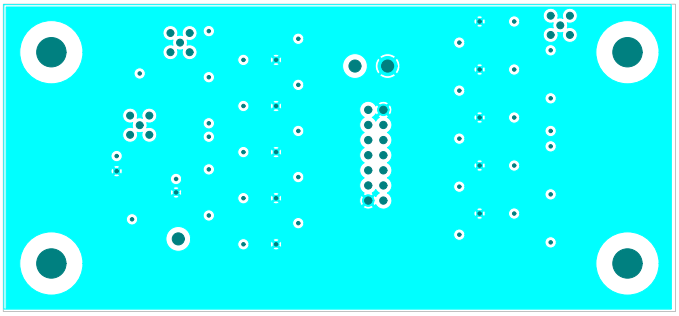

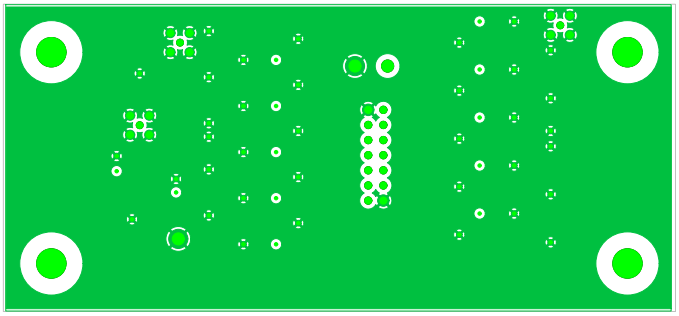

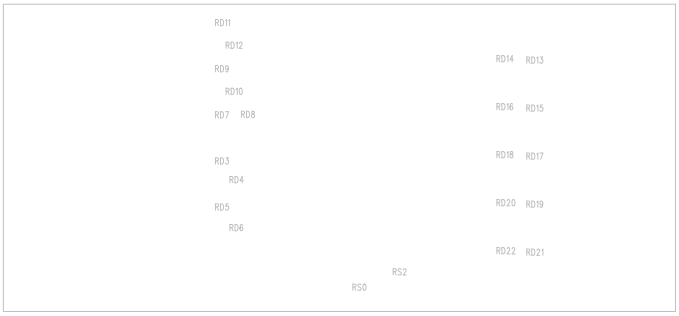
RD11
RD12
RD9
RD10
RD7
RD8
RD3
RD4
RD5
RD6
RD14
RD13
RD16
RD15
RD18
RD17
RD20
RD19
RD22
RD21
RS2
RS0

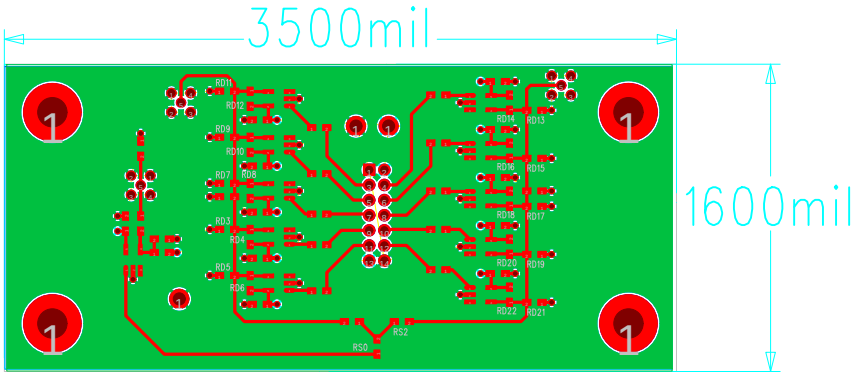

layer stackup		Overall Thickness: 55.4 mils
dielectric	copper	layer # / description
	1 oz	1 top
10 mils		
	1 oz	2 GND
30 mils		
	1 oz	3 PWR
10 mils		
	1 oz	4 bottom