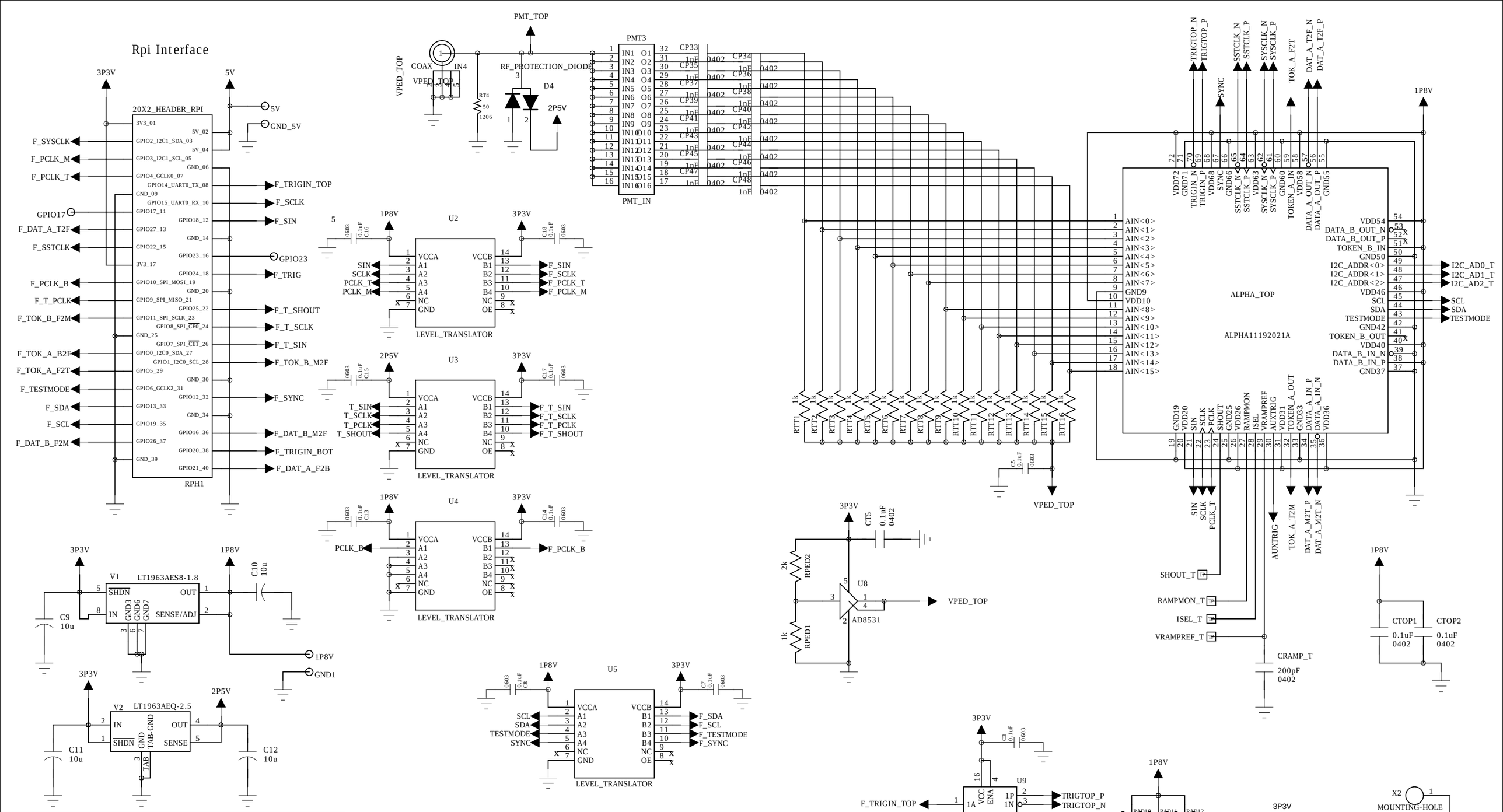

institution:	University of Hawai'i at Manoa High Energy Physics Group Instrumentation Development Lab
title:	ALPHA_Eval_v1
revision:	A
IDLAB design #:	IDL_21_020
circuit design:	MK
PCB design:	MK
sheet #:	1 of 4
sheet description:	TOP
date last modified:	2022-01-26

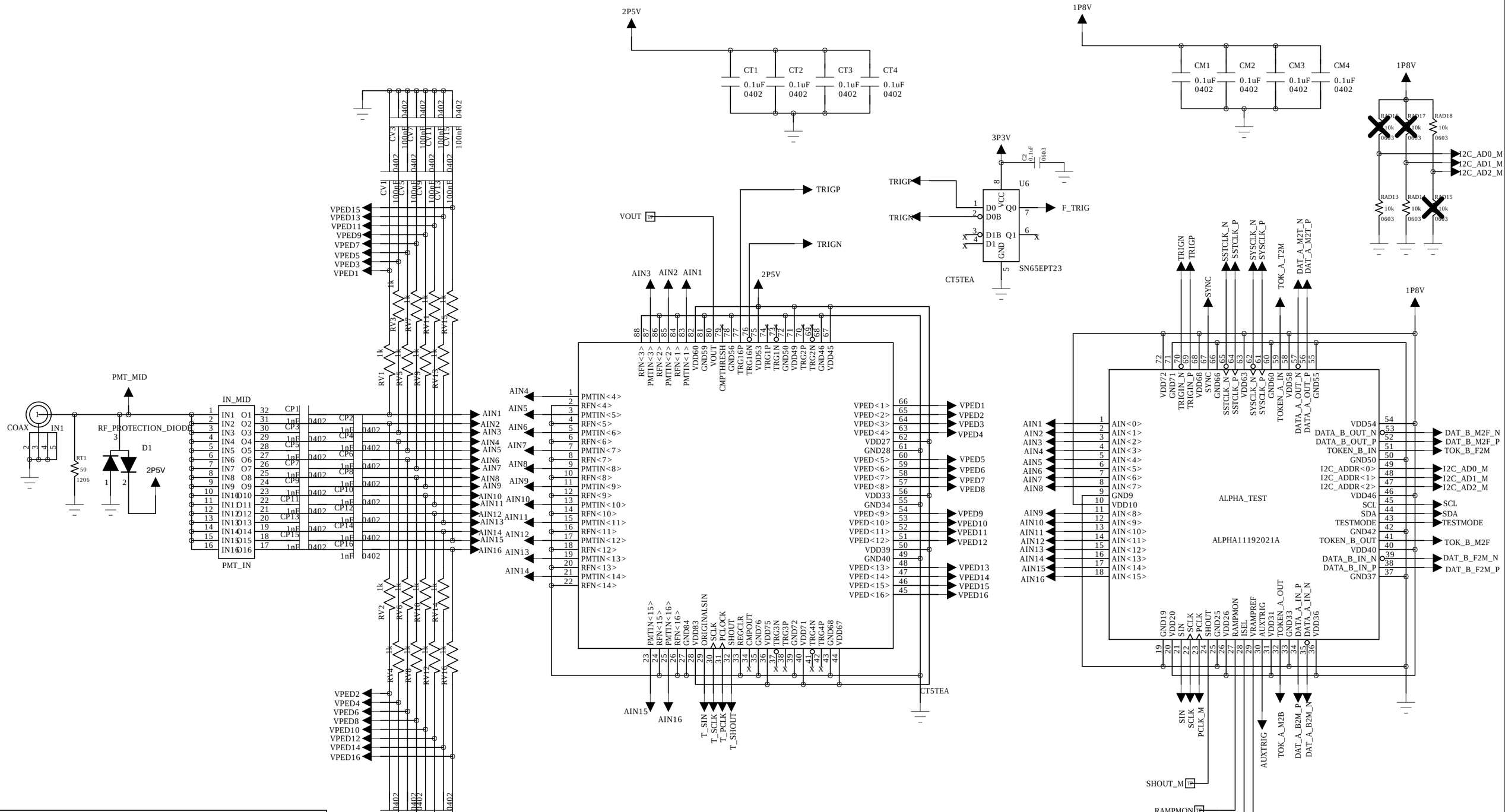

institution:	University of Hawai'i at Manoa High Energy Physics Group Instrumentation Development Lab
title:	ALPHA_Eval_v1
revision:	A
IDLAB design #:	IDL_21_020
circuit design:	MK
PCB design:	MK
sheet #:	2 of 4
sheet description:	ALPHA+CT5TEA
date last modified:	2022-01-26

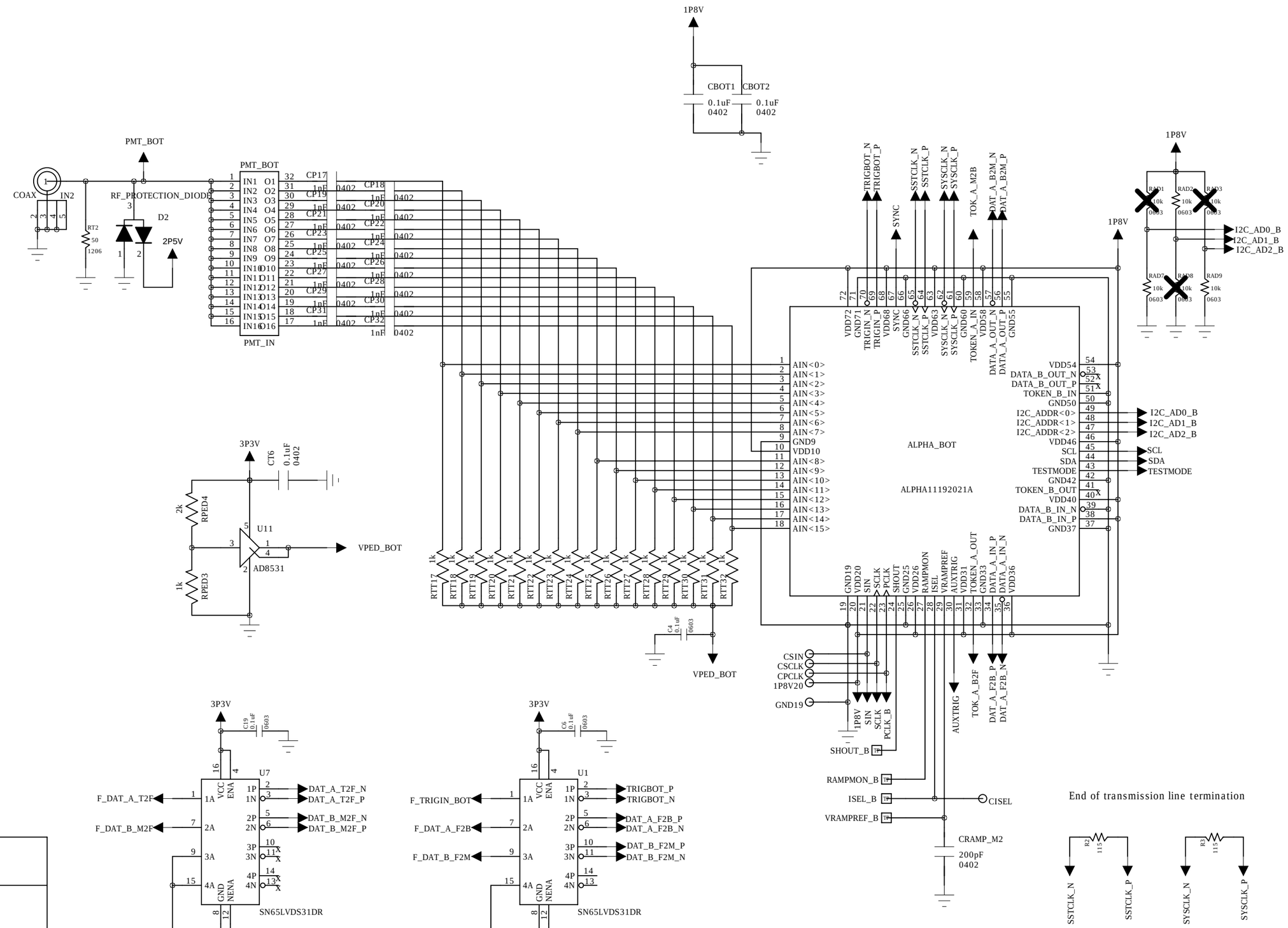

institution:	University of Hawai'i at Manoa High Energy Physics Group Instrumentation Development Lab
title:	ALPHA_Eval_v1
revision:	A
IDLAB design #:	IDL_21_020
circuit design:	MK
PCB design:	MK
sheet #:	3 of 4
sheet description:	BOTTOM
date last modified:	2022-01-26

SIGNAL RELATED

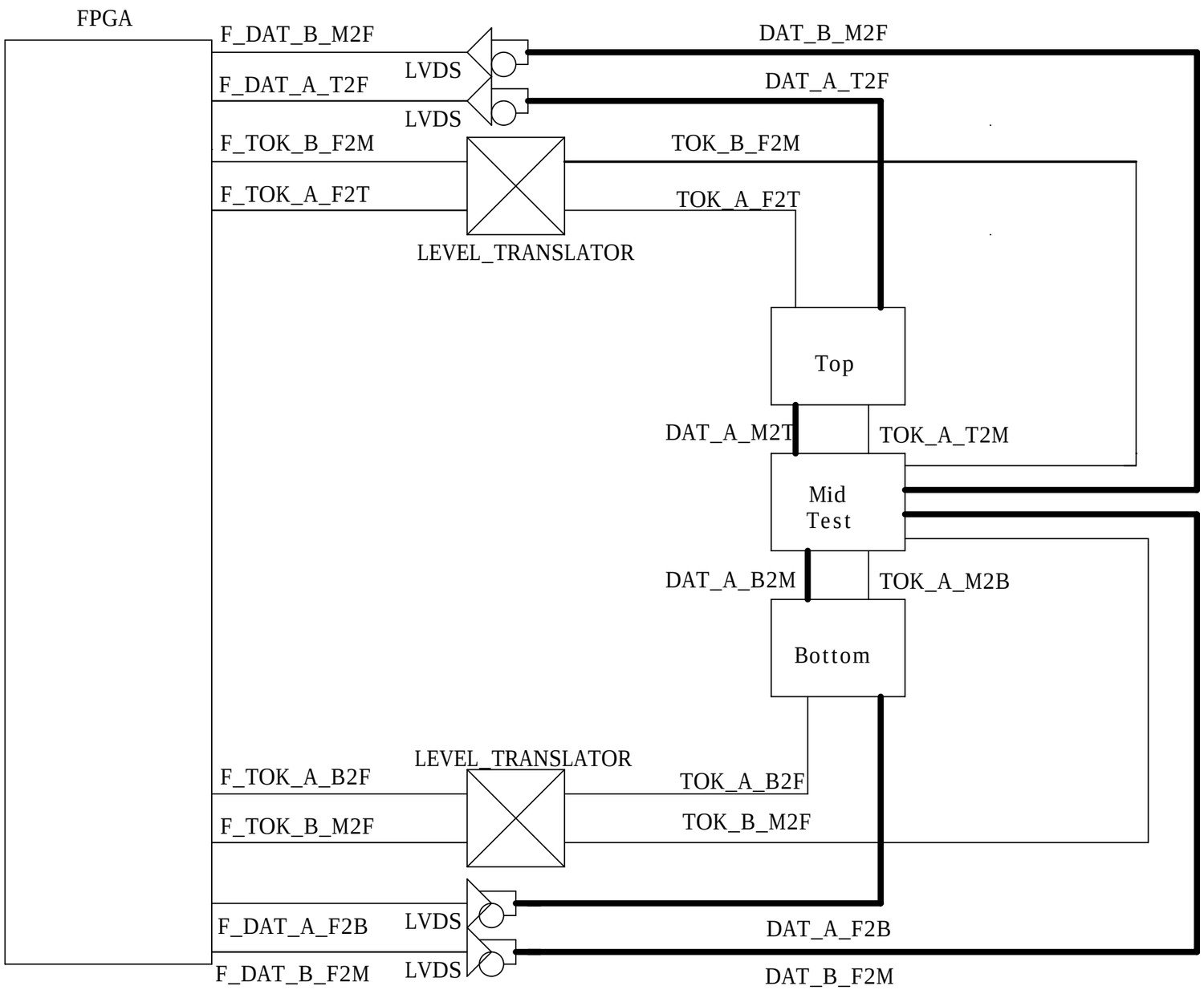

PROGRAMMING RELATED

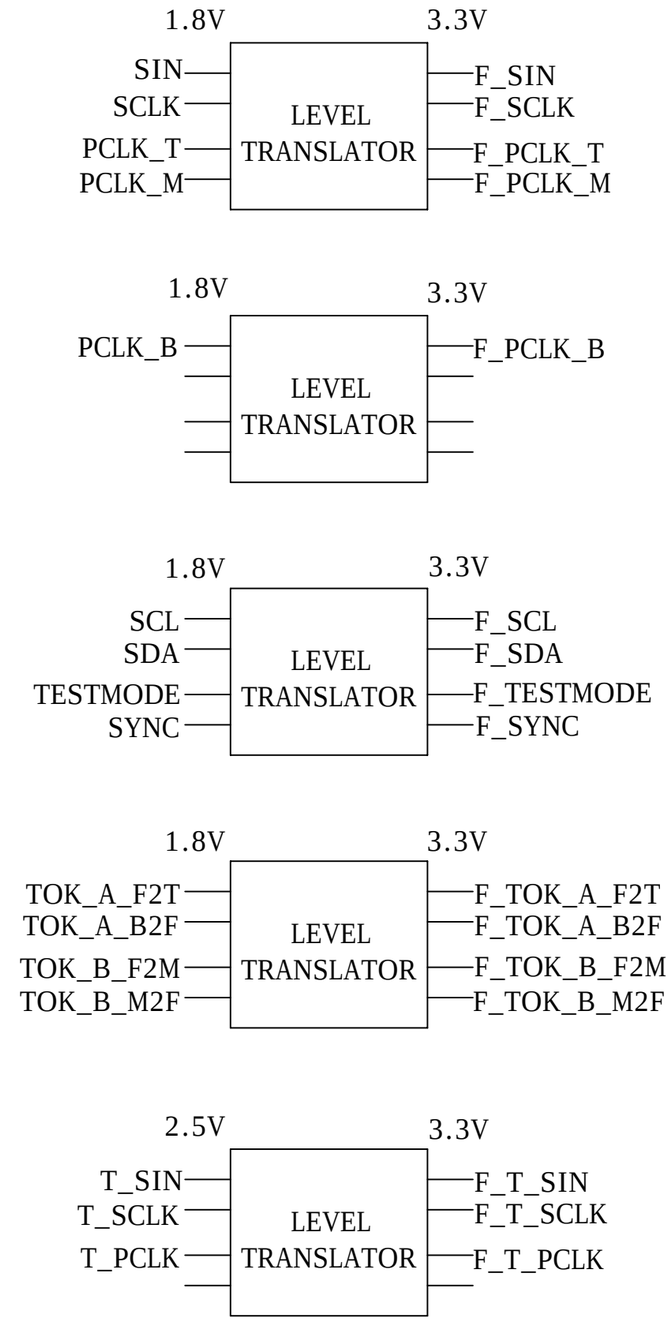

institution:	University of Hawai'i at Manoa High Energy Physics Group Instrumentation Development Lab
title:	ALPHA_Eval_v1
revision:	A
IDLAB design #:	IDL_21_020
circuit design:	MK
PCB design:	MK
sheet #:	4 of 4
sheet description:	WIRING_DOCUMENTATION
date last modified:	2022-01-26