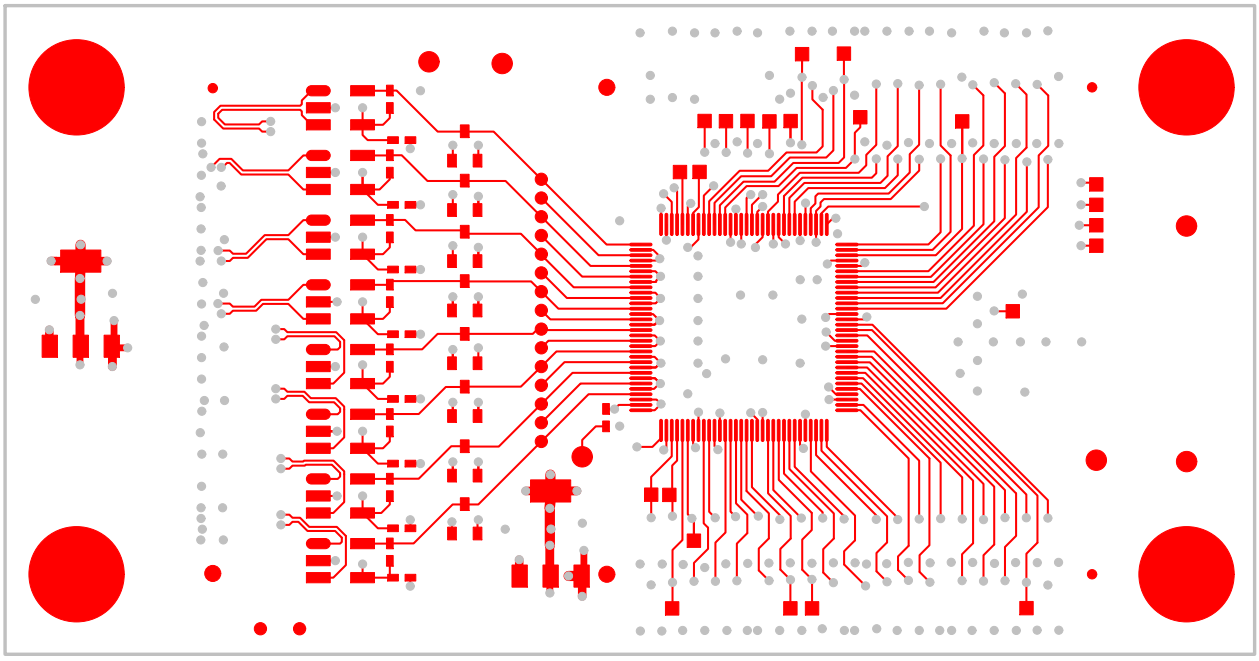

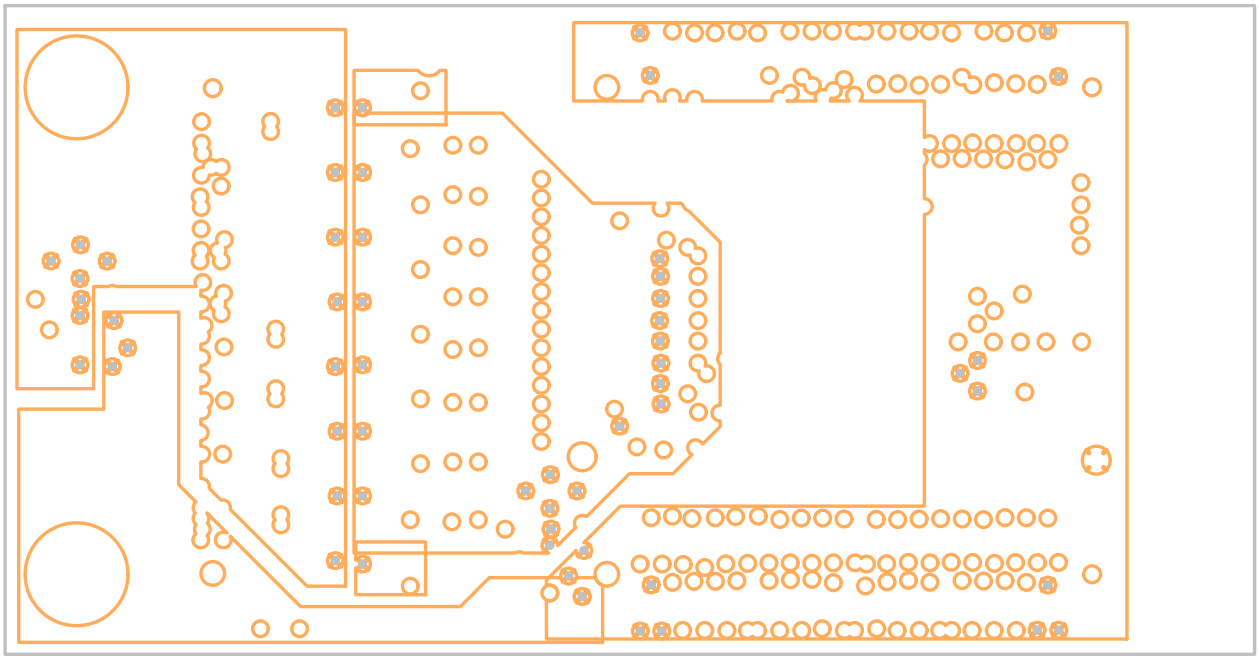

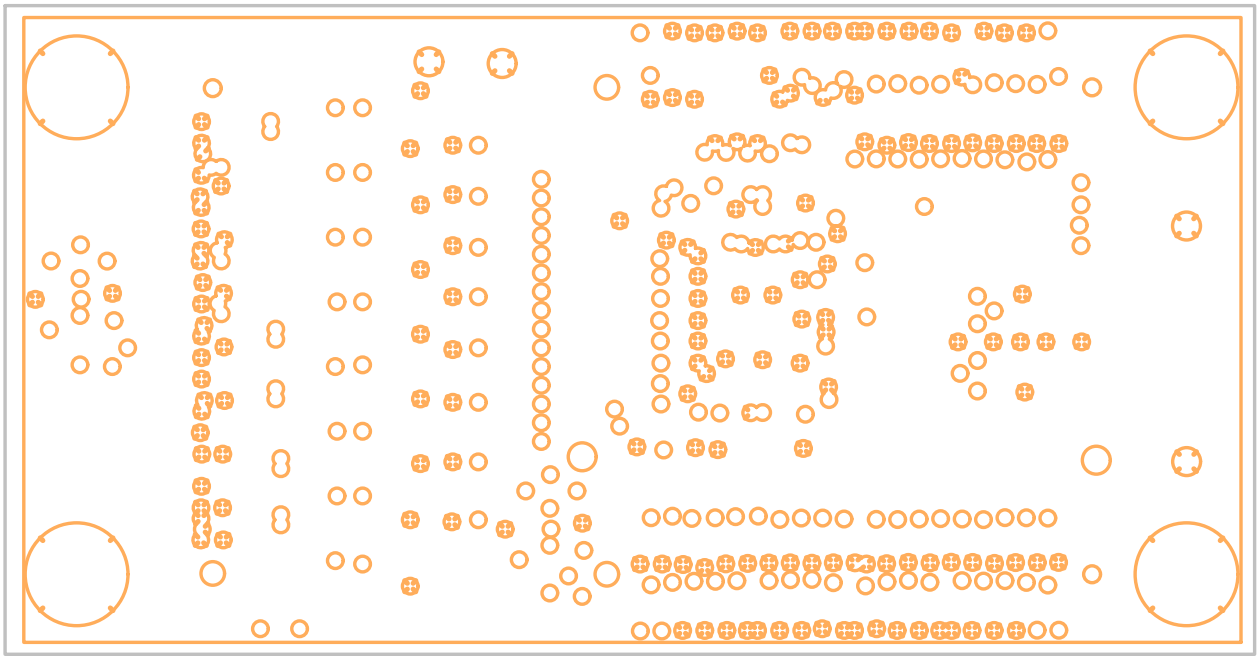

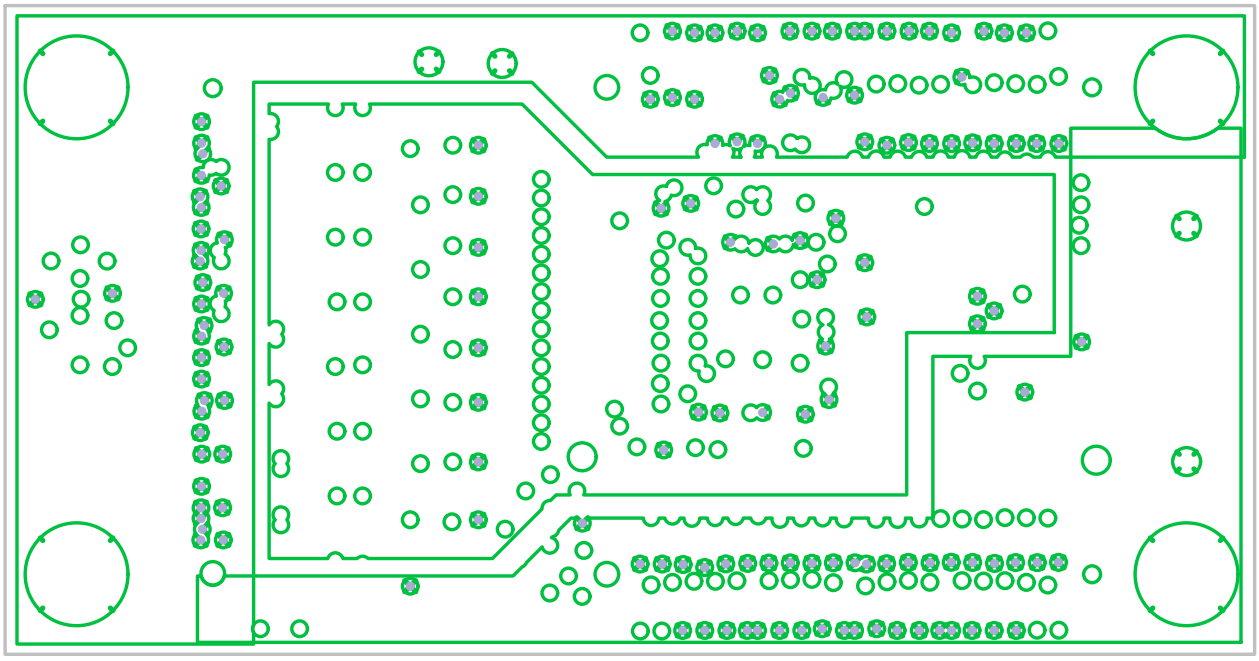

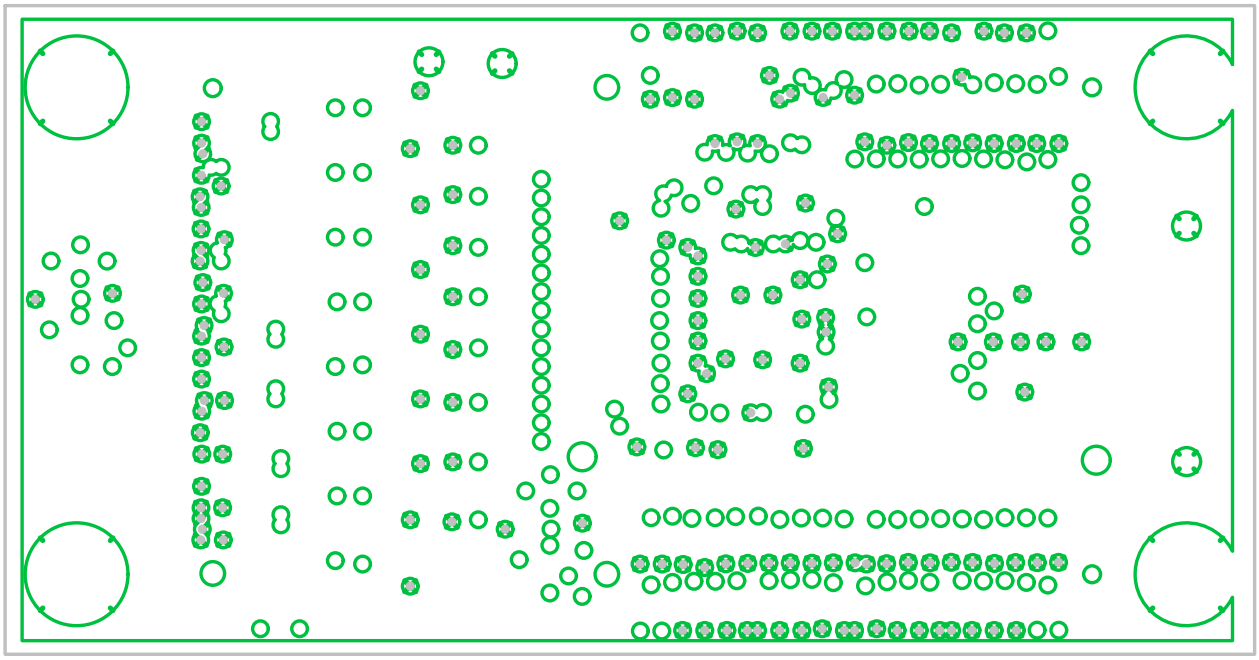

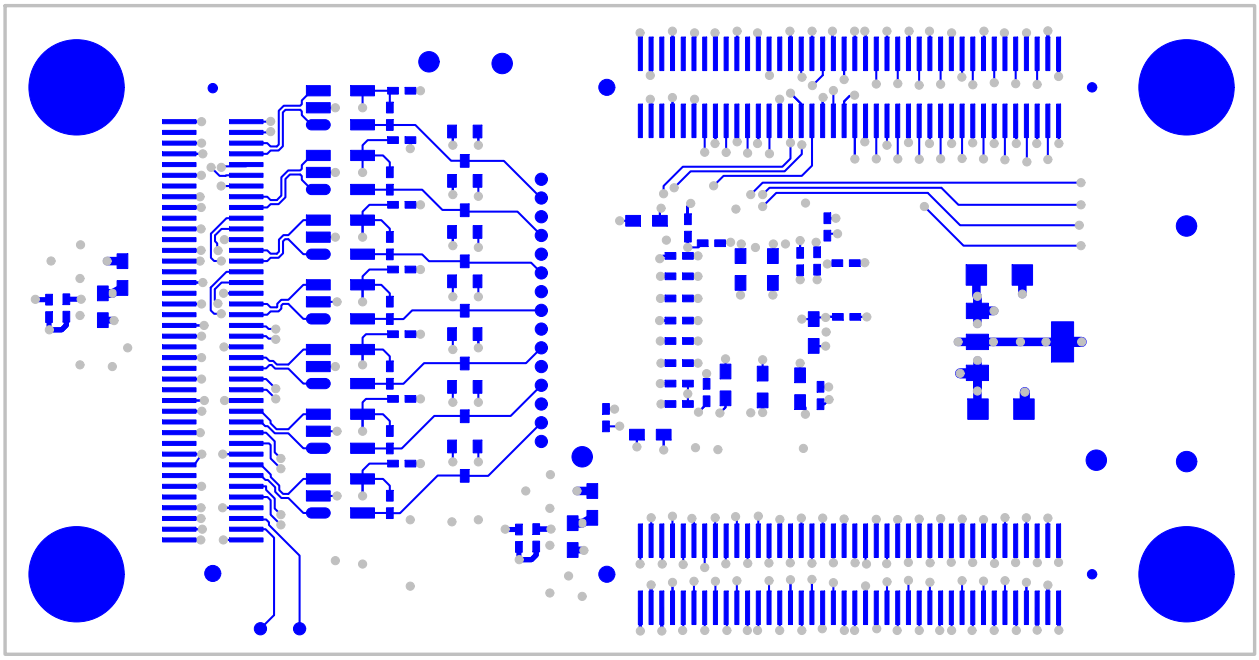

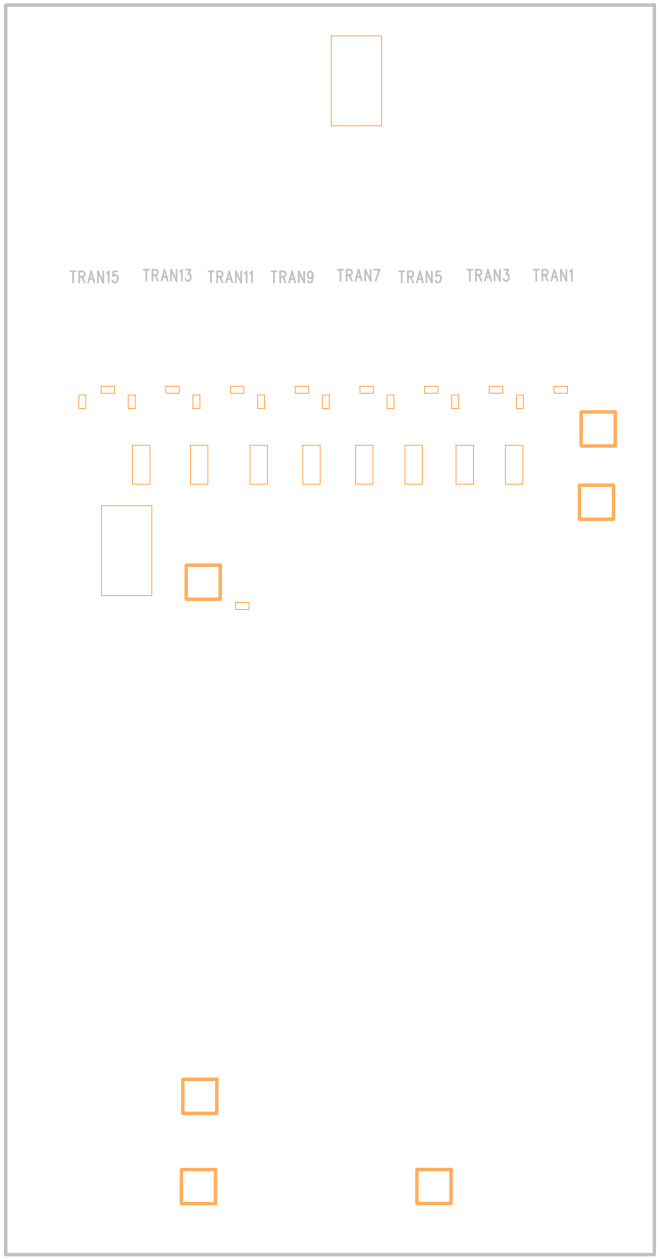
TRAN15
TRAN13
TRAN11
TRAN9
TRAN7
TRAN5
TRAN3
TRAN1

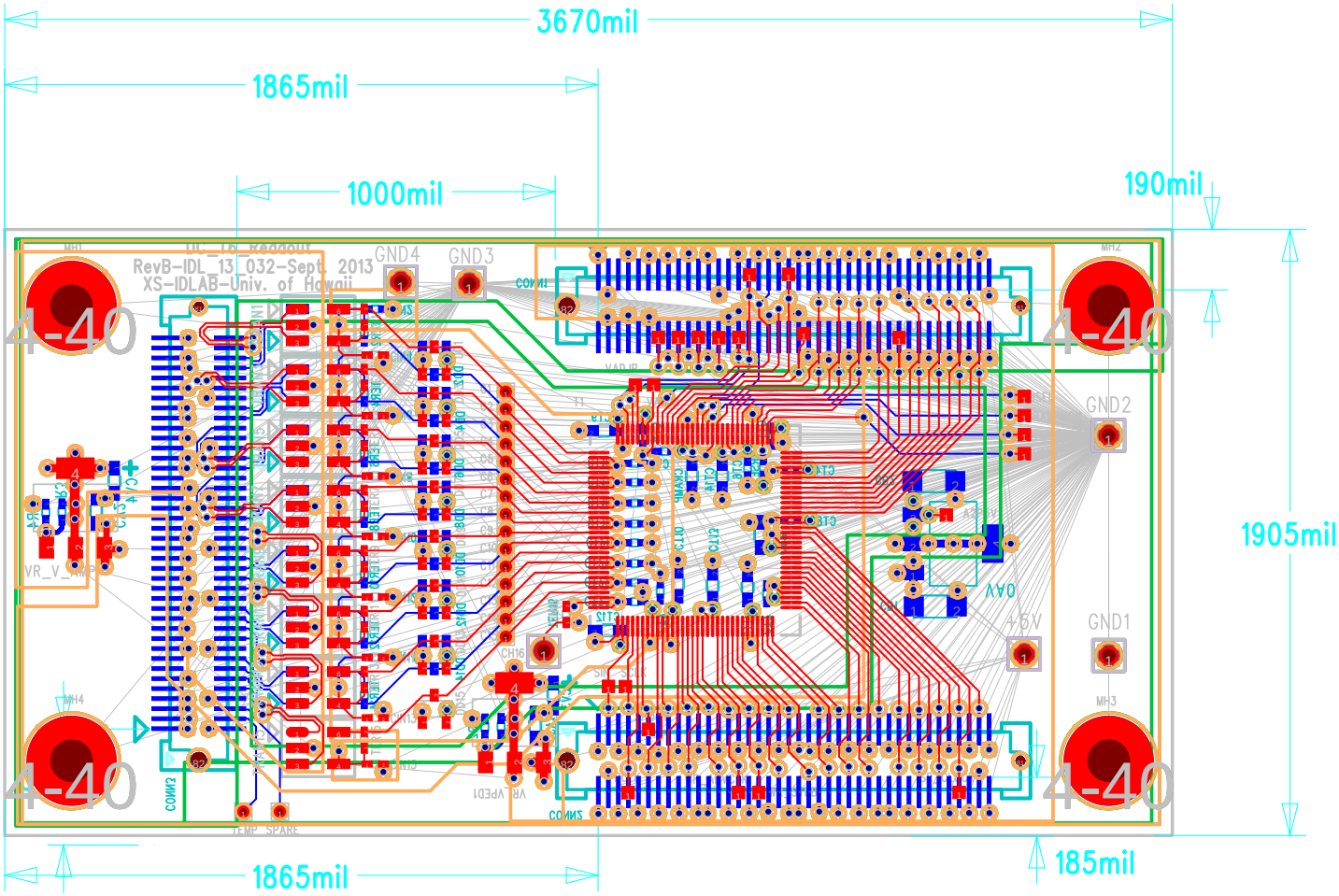
3670mil
1865mil
1000mil
190mil
1905mil
185mil
1865mil
RevB-IDL_13_032-Sept. 2013
XS-IDLAB-Univ. of Hawaii
GND4
GND3
GND2
GND1
4-40
4-40
4-40
4-40
MH1
MH2
MH3
MH4
+6V
0AV
COMM1
COMM2
COMM3
TEMP_SPARE