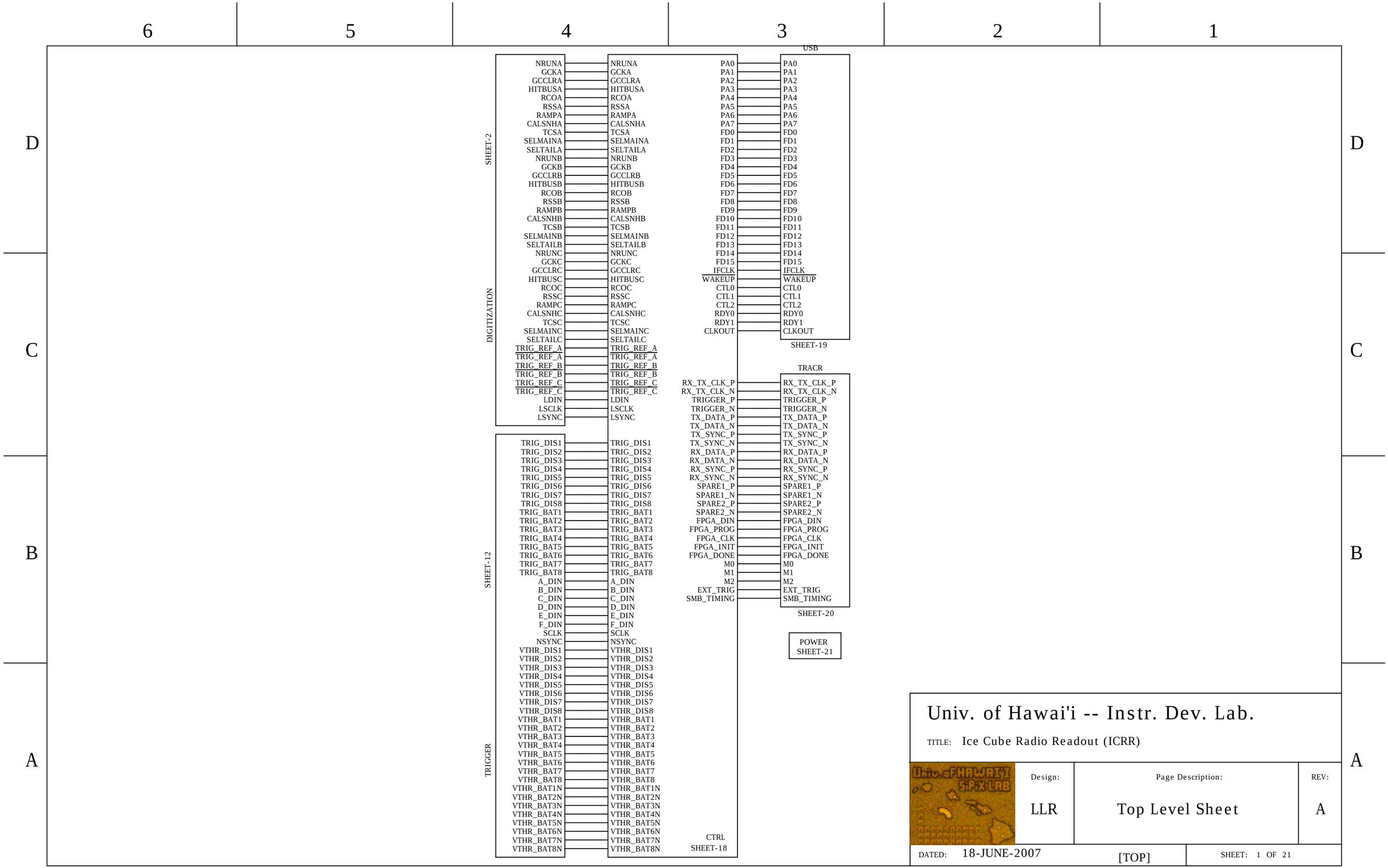
6
5
4
3
2
1
D
C
B
A
SHEET-2
DIGITIZATION
NRUNA
GCKA
GCCLRA
HITBUSA
RCOA
RSSA
RAMPA
CALSNHA
TCSA
SELMAINA
SELTAILA
NRUNB
GCKB
GCCLRB
HITBUSB
RCOB
RSSB
RAMPB
CALSNHB
TCSB
SELMAINB
SELTAILB
NRUNC
GCKC
GCCLRC
HITBUSC
RCOC
RSSC
RAMPC
CALSNHC
TCSC
SELMAINC
SELTAILC
TRIG_REF_A
TRIG_REF_A
TRIG_REF_B
TRIG_REF_B
TRIG_REF_C
TRIG_REF_C
LDIN
LSCLK
LSYNC
SHEET-12
TRIGGER
TRIG_DIS1
TRIG_DIS2
TRIG_DIS3
TRIG_DIS4
TRIG_DIS5
TRIG_DIS6
TRIG_DIS7
TRIG_DIS8
TRIG_BAT1
TRIG_BAT2
TRIG_BAT3
TRIG_BAT4
TRIG_BAT5
TRIG_BAT6
TRIG_BAT7
TRIG_BAT8
A_DIN
B_DIN
C_DIN
D_DIN
E_DIN
F_DIN
SCLK
NSYNC
VTHR_DIS1
VTHR_DIS2
VTHR_DIS3
VTHR_DIS4
VTHR_DIS5
VTHR_DIS6
VTHR_DIS7
VTHR_DIS8
VTHR_BAT1
VTHR_BAT2
VTHR_BAT3
VTHR_BAT4
VTHR_BAT5
VTHR_BAT6
VTHR_BAT7
VTHR_BAT8
VTHR_BAT1N
VTHR_BAT2N
VTHR_BAT3N
VTHR_BAT4N
VTHR_BAT5N
VTHR_BAT6N
VTHR_BAT7N
VTHR_BAT8N
CTRL
SHEET-18
PA0
PA1
PA2
PA3
PA4
PA5
PA6
PA7
FD0
FD1
FD2
FD3
FD4
FD5
FD6
FD7
FD8
FD9
FD10
FD11
FD12
FD13
FD14
FD15
IFCLK
WAKEUP
CTL0
CTL1
CTL2
RDY0
RDY1
CLKOUT
USB
SHEET-19
RX_TX_CLK_P
RX_TX_CLK_N
TRIGGER_P
TRIGGER_N
TX_DATA_P
TX_DATA_N
TX_SYNC_P
TX_SYNC_N
RX_DATA_P
RX_DATA_N
RX_SYNC_P
RX_SYNC_N
SPARE1_P
SPARE1_N
SPARE2_P
SPARE2_N
FPGA_DIN
FPGA_PROG
FPGA_CLK
FPGA_INIT
FPGA_DONE
M0
M1
M2
EXT_TRIG
SMB_TIMING
TRACR
SHEET-20
POWER
SHEET-21
Univ. of Hawai'i -- Instr. Dev. Lab.
TITLE: Ice Cube Radio Readout (ICRR)
Design:
LLR
Page Description:
Top Level Sheet
REV:
A
DATED: 18-JUNE-2007
[TOP]
SHEET: 1 OF 21

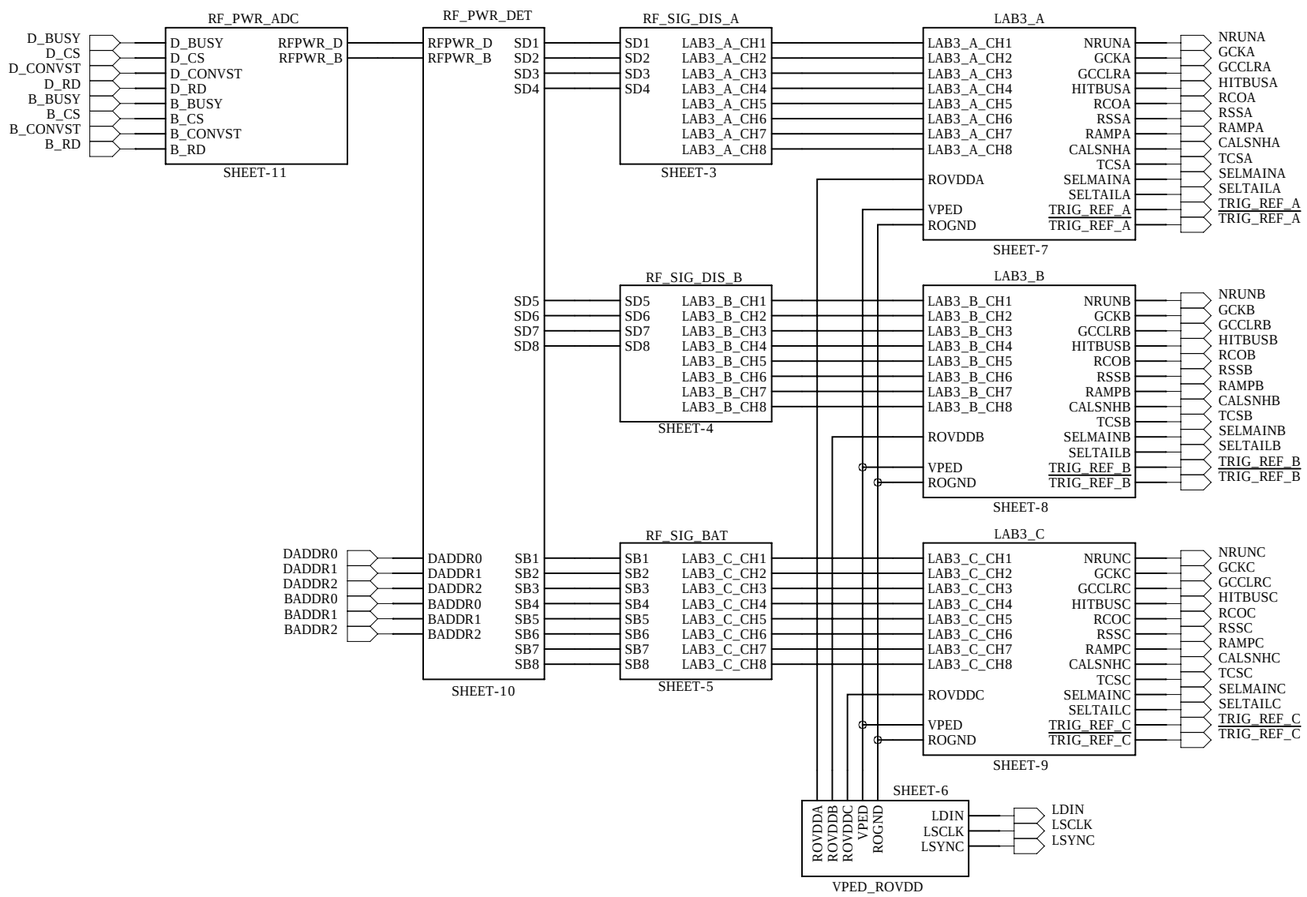

Univ. of Hawai'i -- Instr. Dev. Lab.

TITLE: Ice Cube Radio Readout (ICRR)

Design:	Page Description:	REV:
LLR	Digitization Block	A

DATED: 18-JUNE-2007 [DIGITIZATION] SHEET: 2 OF 21

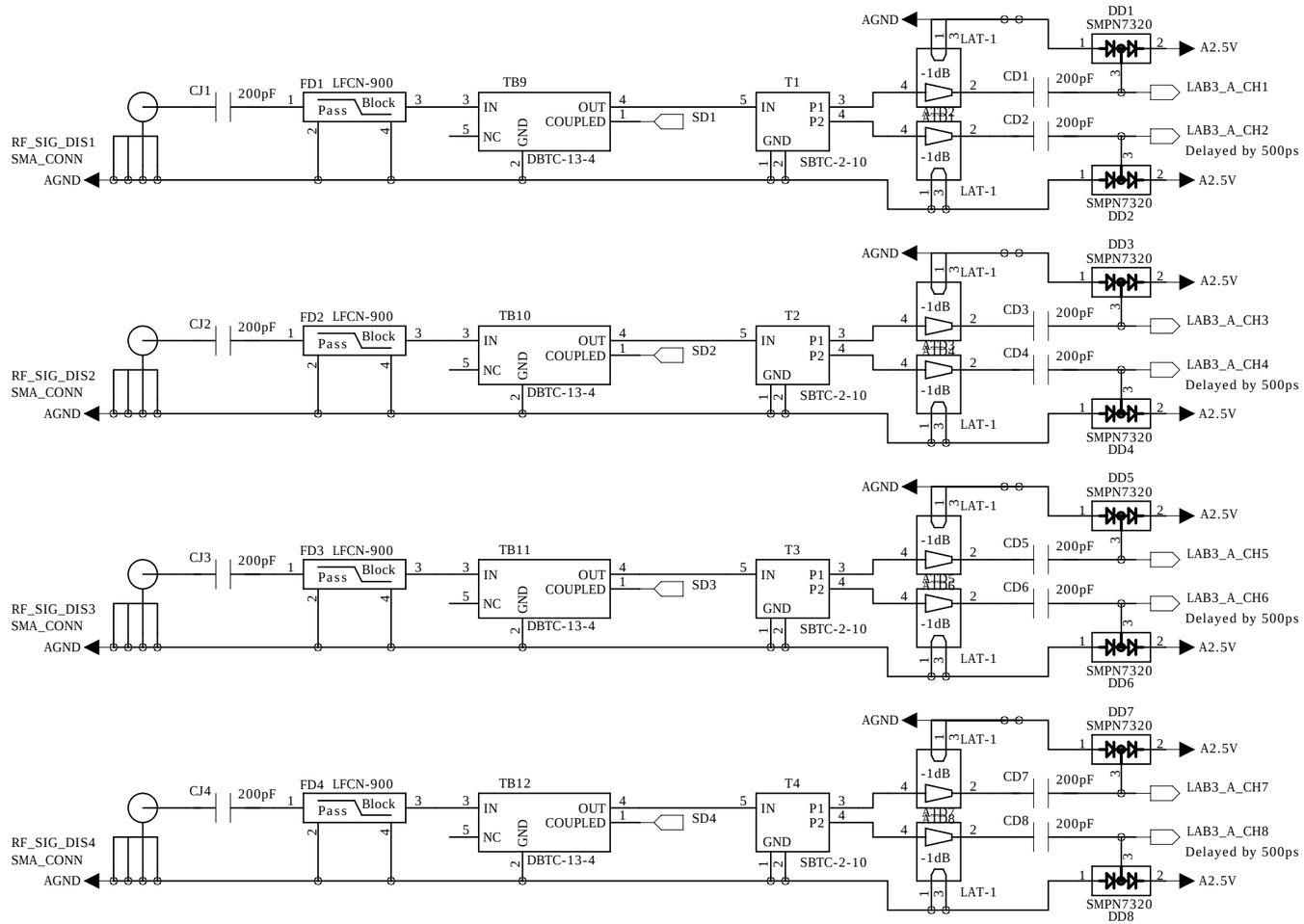

Univ. of Hawai'i -- Instr. Dev. Lab.

TITLE: Ice Cube Radio Readout (ICRR)

Design:	Page Description:	REV:
LLR	RF Inputs Block for Discones	A

DATED: 18-JUNE-2007 [RF_SIG_DIS_A] SHEET: 3 OF 21

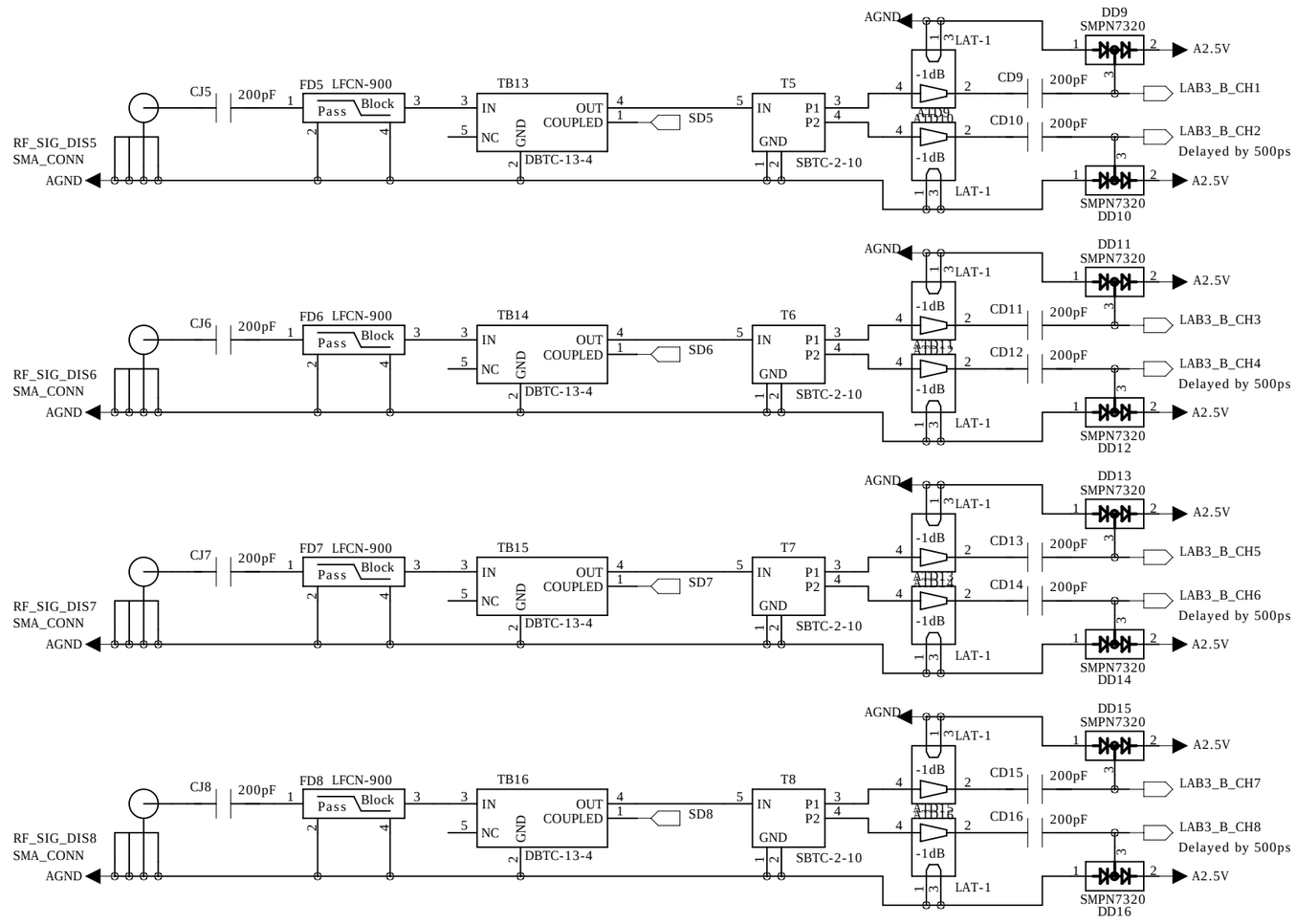

Univ. of Hawai'i -- Instr. Dev. Lab.

TITLE: Ice Cube Radio Readout (ICRR)

Design:	Page Description:	REV:
LLR	RF Inputs Block for Discones	A

DATED: 18-JUNE-2007 [RF_SIG_DIS_B] SHEET: 4 OF 21

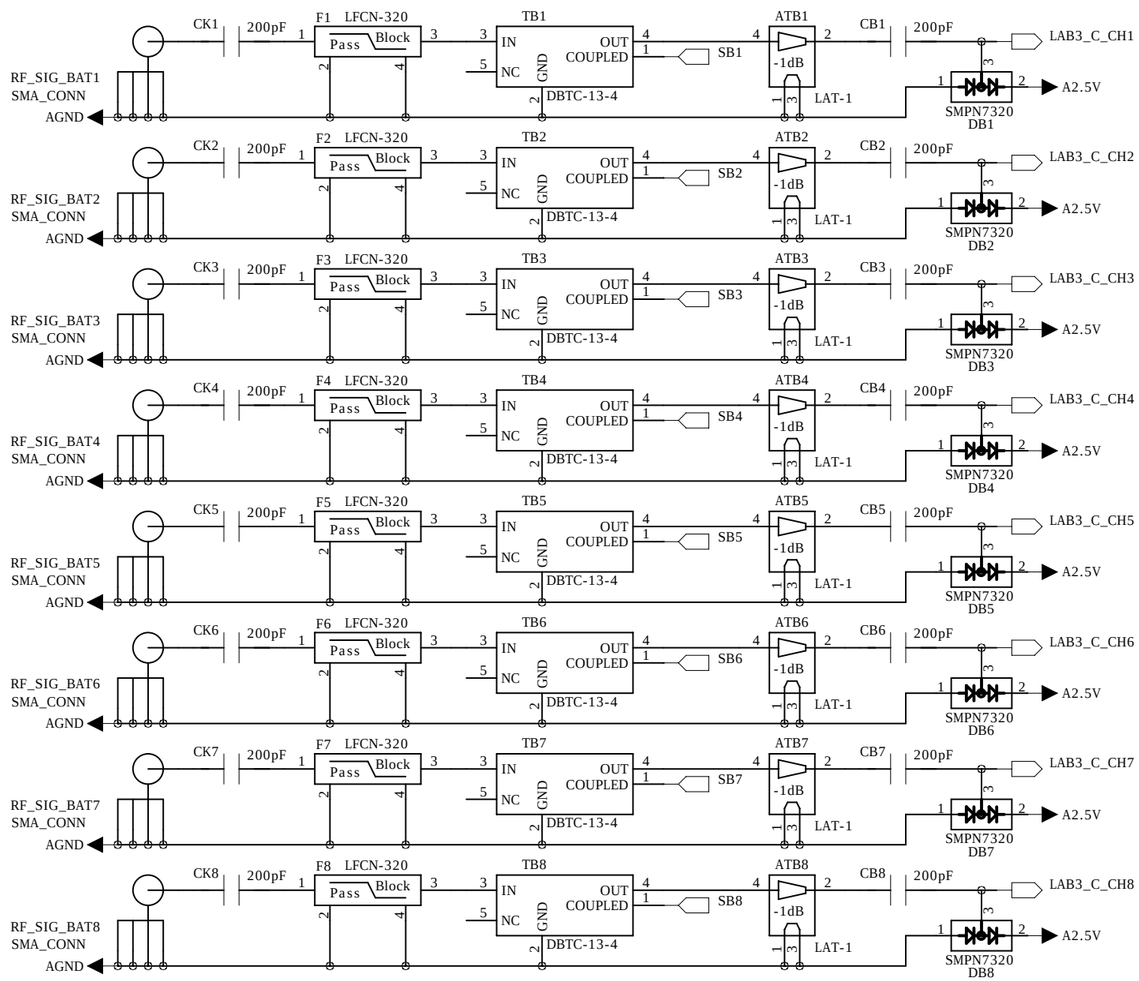

Univ. of Hawai'i -- Instr. Dev. Lab.

TITLE: Ice Cube Radio Readout (ICRR)

Design:	Page Description:	REV:
LLR	RF Inputs Block for Batwings	A

DATED: 18-JUNE-2007 [RF_SIG_BAT] SHEET: 5 OF 21

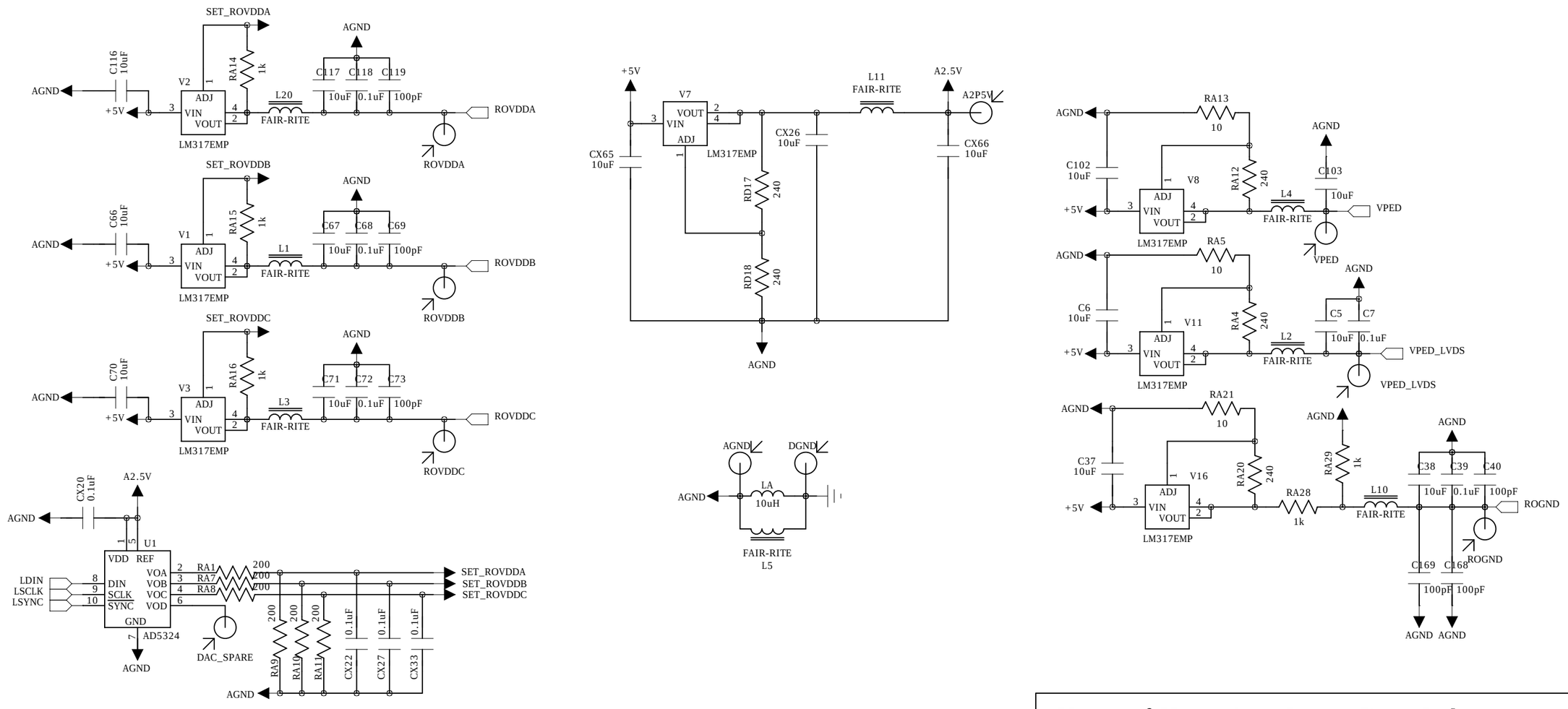

Univ. of Hawai'i -- Instr. Dev. Lab.

TITLE: Ice Cube Radio Readout (ICRR)

Design:	Page Description:	REV:
LLR	VPED/ROVDD Block	A

DATED: 22-JUNE-2007 [VPED/ROVDD] SHEET: 6 OF 21

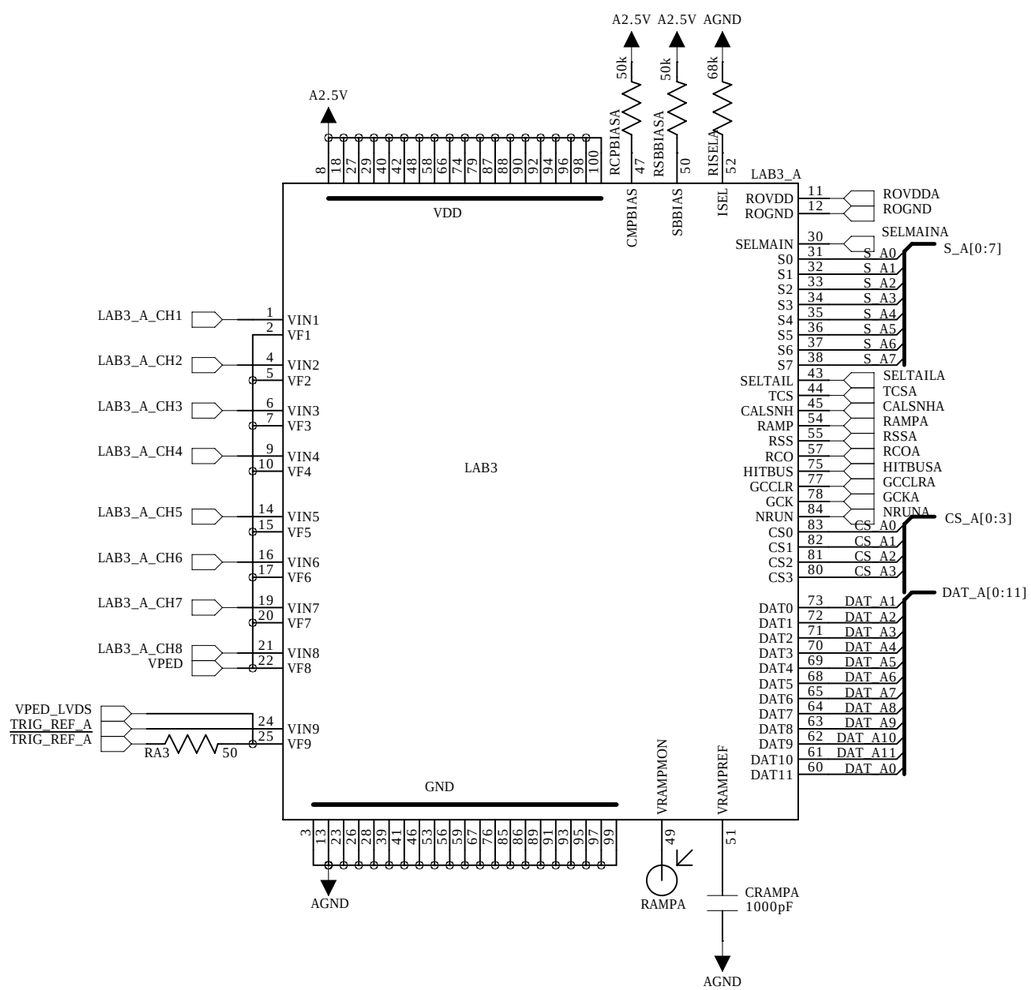

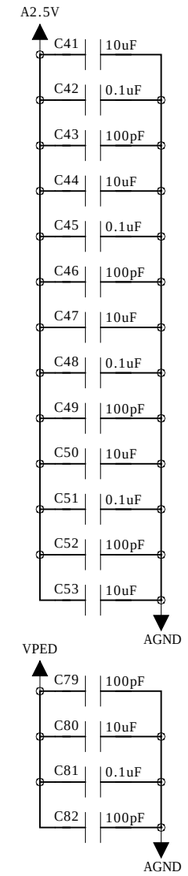

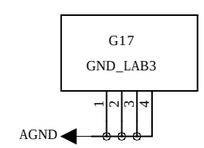

Univ. of Hawai'i -- Instr. Dev. Lab.

TITLE: Ice Cube Radio Readout (ICRR)

Design:	Page Description:	REV:
LLR	LAB3_A Block	A

DATED: 16-JUNE-2007 [LAB3_A] SHEET: 7 OF 21

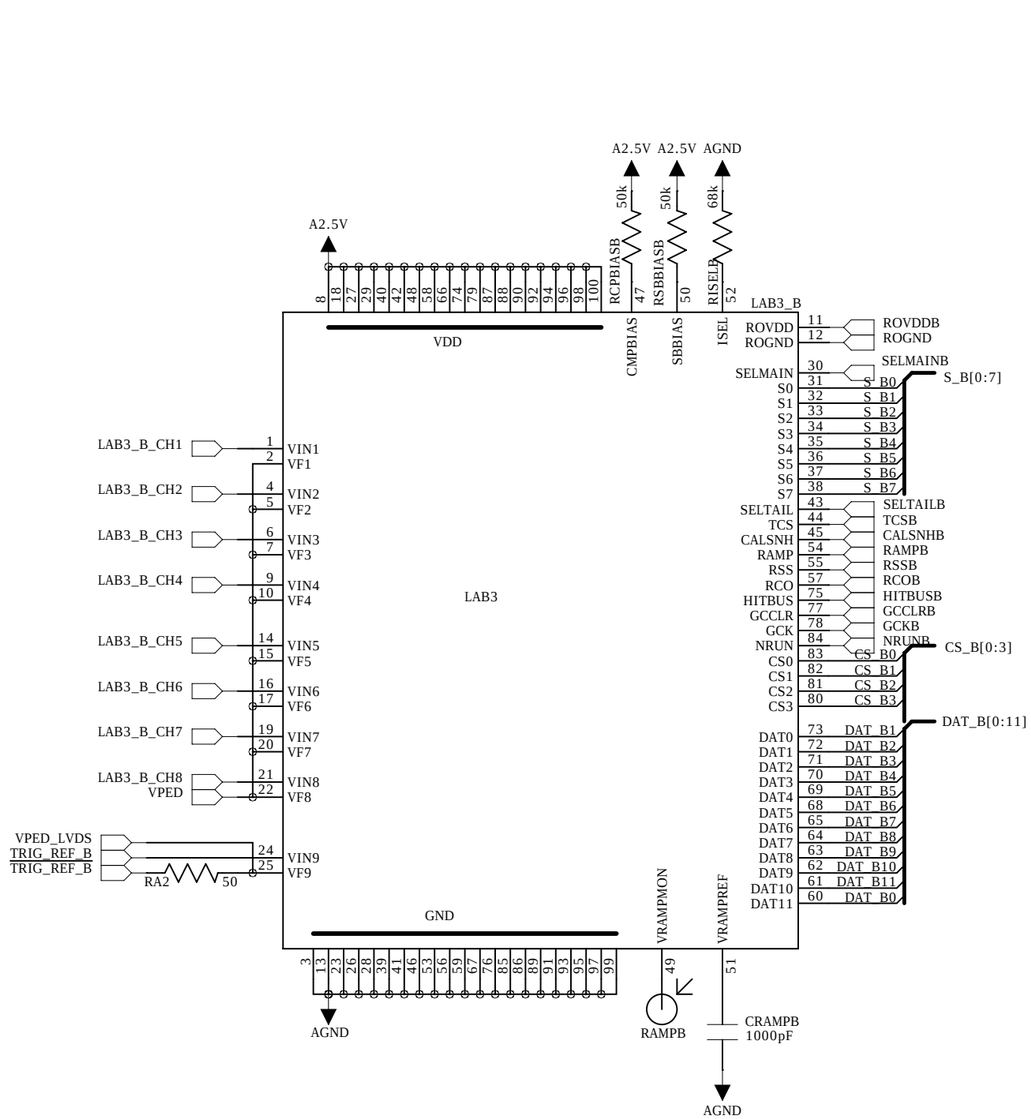

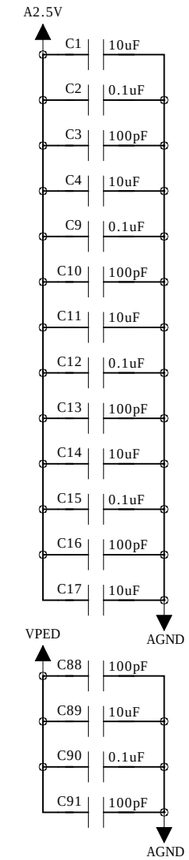

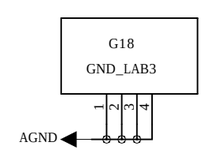

Univ. of Hawai'i -- Instr. Dev. Lab.

TITLE: Ice Cube Radio Readout (ICRR)

Design:	Page Description:	REV:
LLR	LAB3_B Block	A

DATED: 16-JUNE-2007 [LAB3_B] SHEET: 8 OF 21

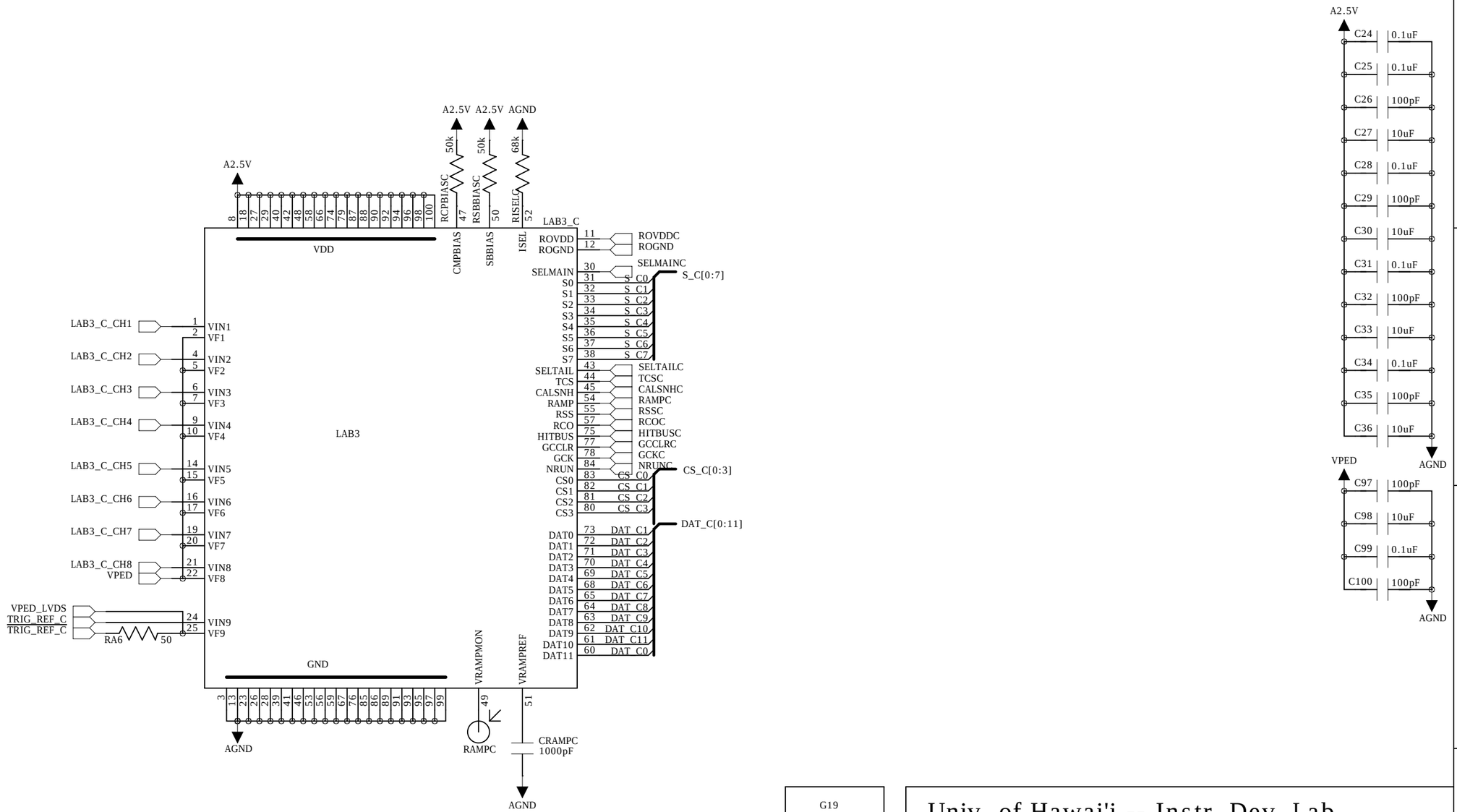

Univ. of Hawai'i -- Instr. Dev. Lab.

TITLE: Ice Cube Radio Readout (ICRR)

Design:	Page Description:	REV:
LLR	LAB3_C Block	A

DATED: 16-JUNE-2007 [LAB3_C] SHEET: 9 OF 21

All RT are 50 Ohm

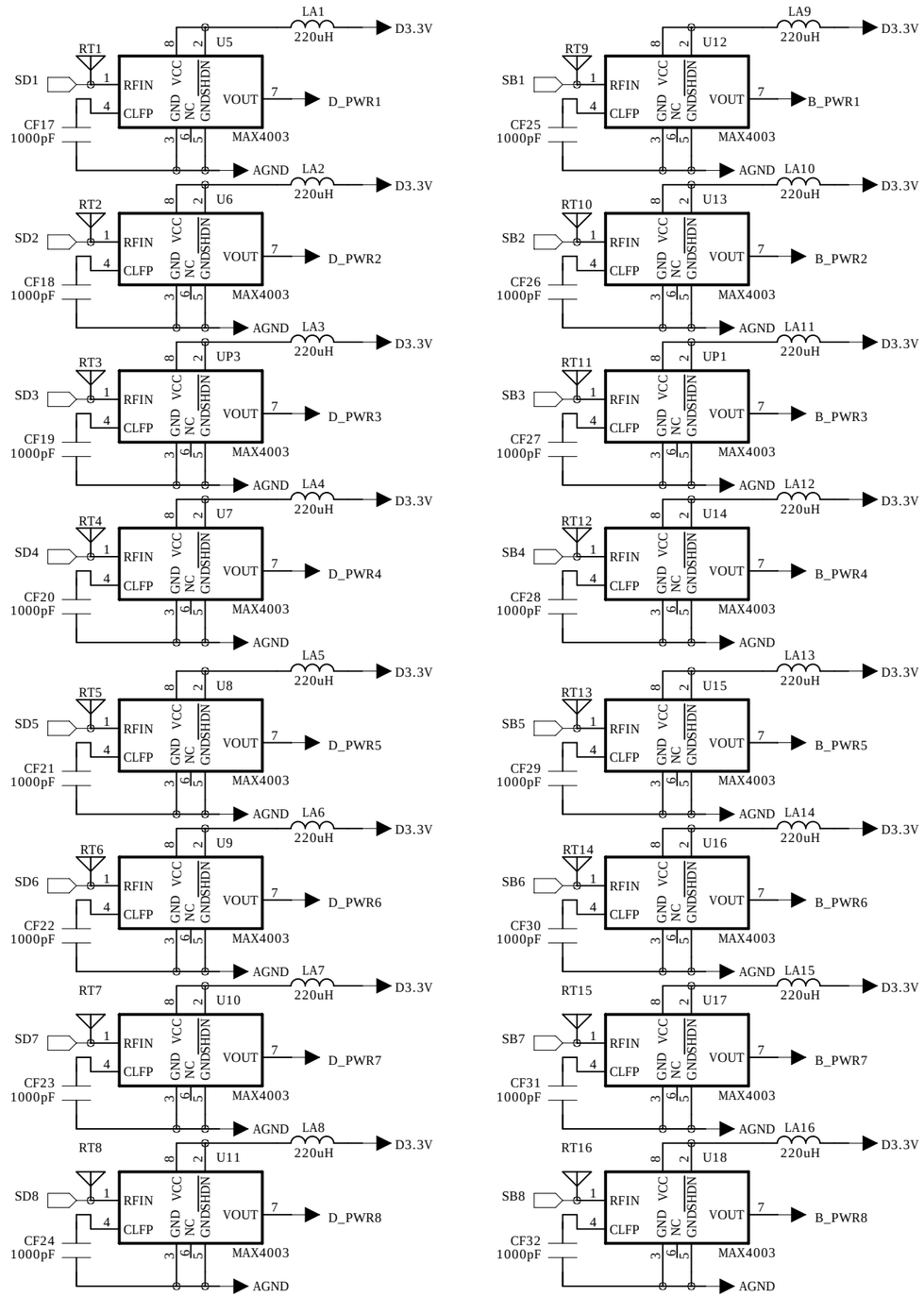

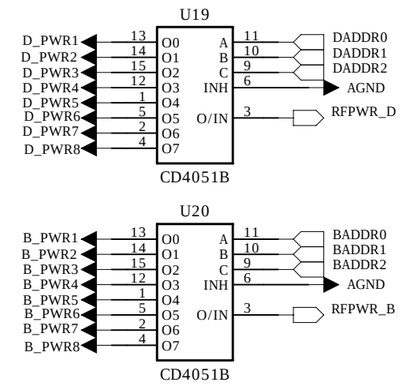

Univ. of Hawai'i -- Instr. Dev. Lab.

TITLE: Ice Cube Radio Readout (ICRR)

Design:	Page Description:	REV:
LLR	RF Power Detection Block	A

DATED: 18-JUNE-2007 [RF_PWR_DET] SHEET: 10 OF 21

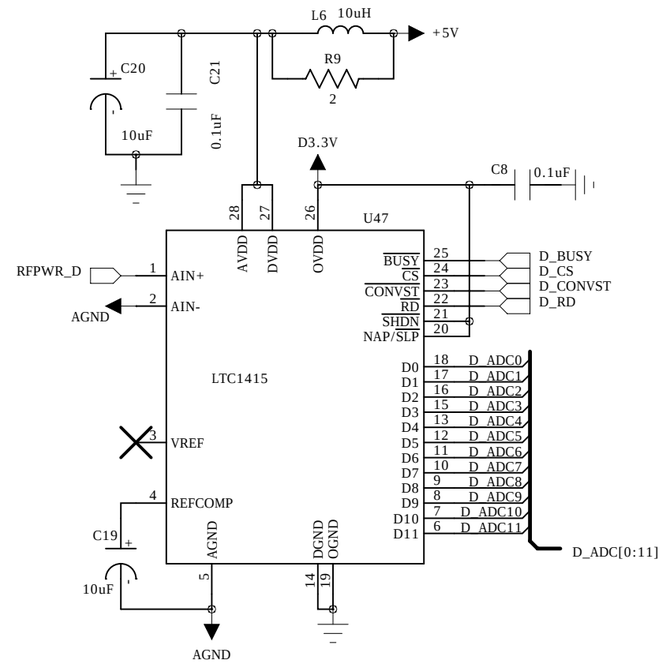

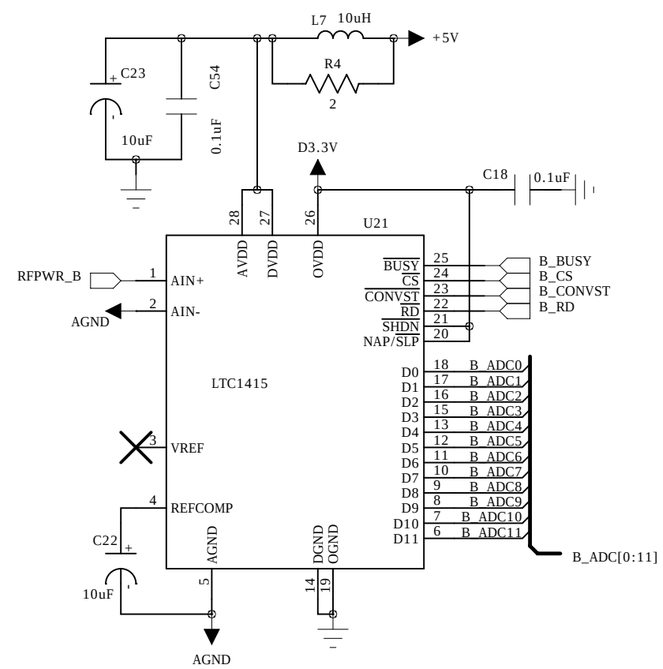

Univ. of Hawai'i -- Instr. Dev. Lab.

TITLE: Ice Cube Radio Readout (ICRR)

Design:	Page Description:	REV:
LLR	RF Power ADC Block	A

DATED: 18-JUNE-2007 [RF_PWR_ADC] SHEET: 11 OF 21

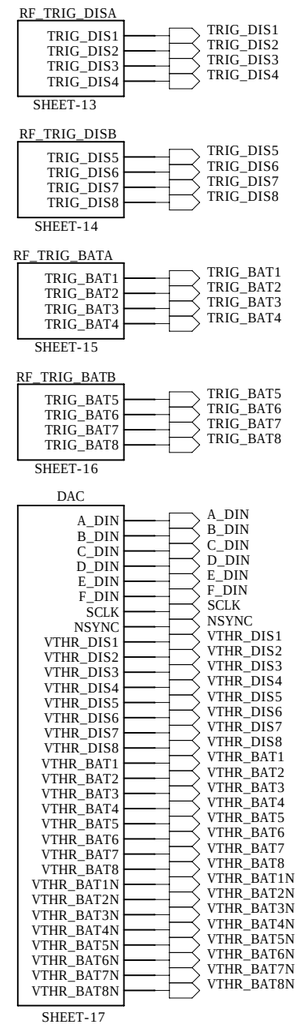

Univ. of Hawai'i -- Instr. Dev. Lab.

TITLE: Ice Cube Radio Readout (ICRR)

Design:	Page Description:	REV:
LLR	Trigger Block	A

DATED: 09-JUNE-2007 [TRIGGER] SHEET: 12 OF 21

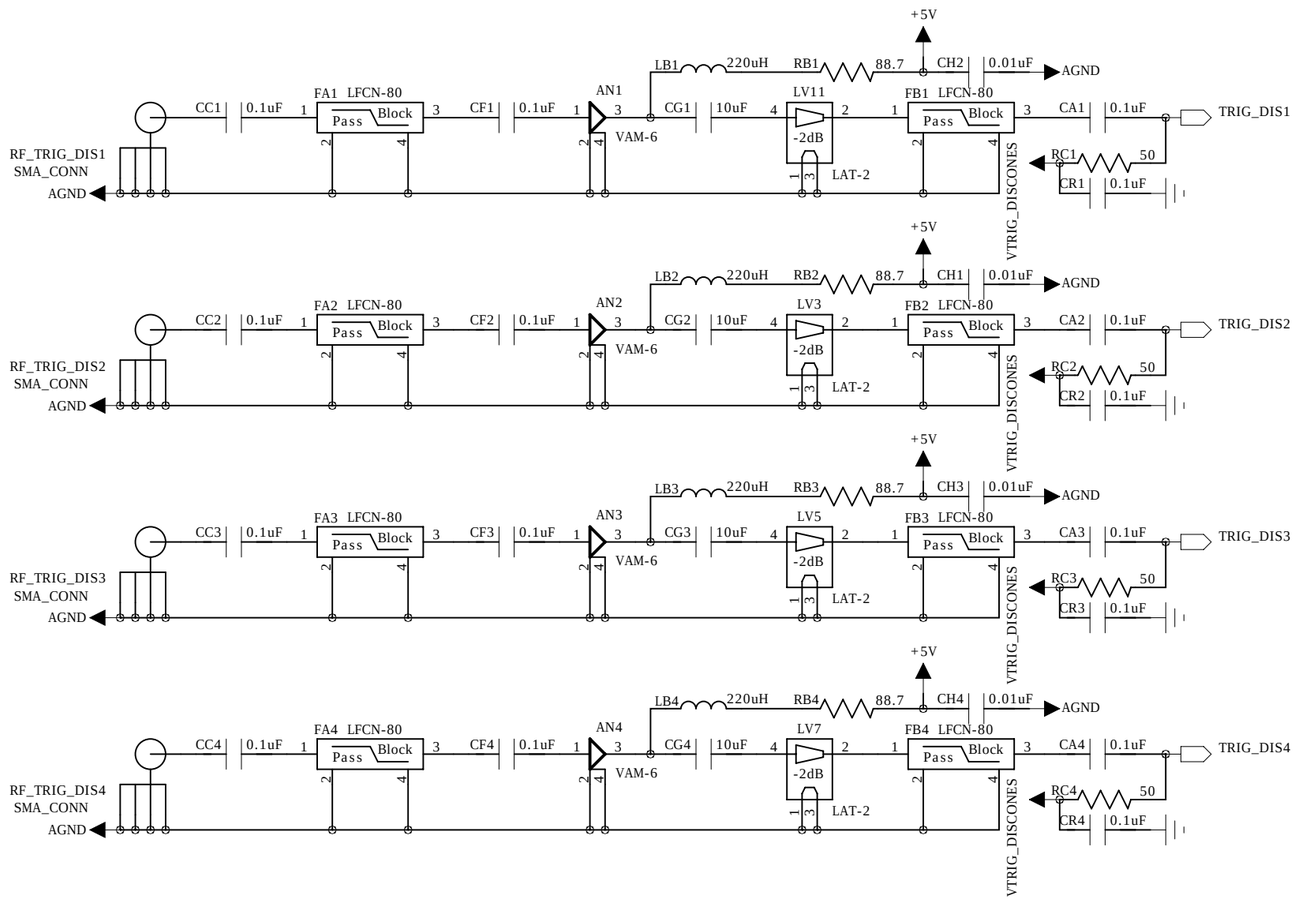

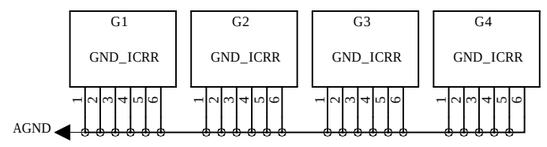

Univ. of Hawai'i -- Instr. Dev. Lab.

TITLE: Ice Cube Radio Readout (ICRR)

Design:	Page Description:	REV:
LLR	RF Input Block for Discone Trigging	A

DATED: 15-JUNE-2007 [RF_TRIG_DISA] SHEET: 13 OF 21

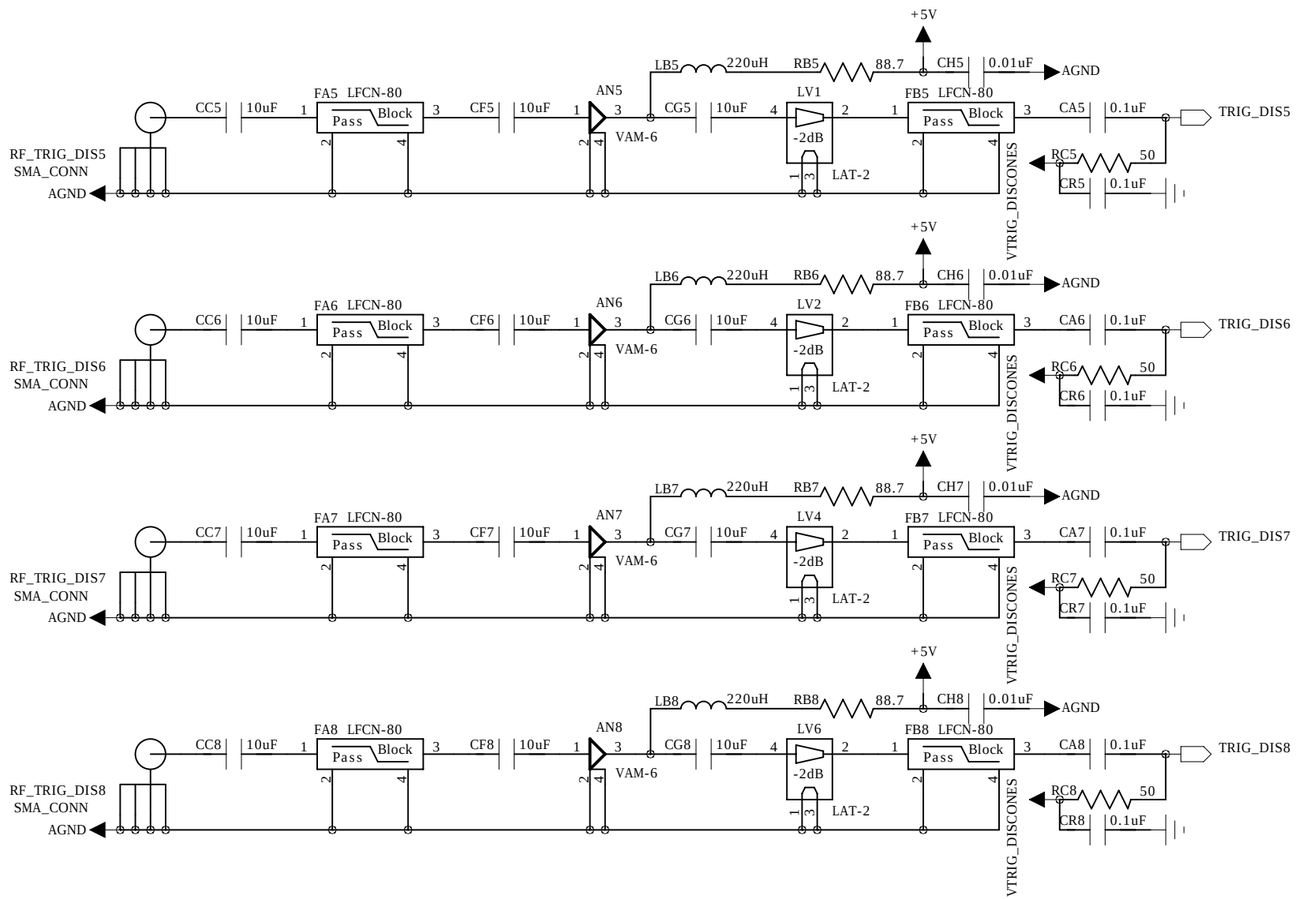

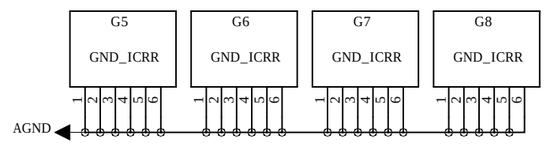

Univ. of Hawai'i -- Instr. Dev. Lab.

TITLE: Ice Cube Radio Readout (ICRR)

Design:	Page Description:	REV:
LLR	RF Input Block for Discone Trigging	A

DATED: 15-JUNE-2007 [RF_TRIG_DISB] SHEET: 14 OF 21

if tunnel diodes are being used with batwing triggering
    then removed capacitors for bypassing amplification circuit
    and install capacitors for the amplification circuit
else
    then install capacitors for bypassing amplification circuit
    and remove capacitors for the amplification circuit
end if

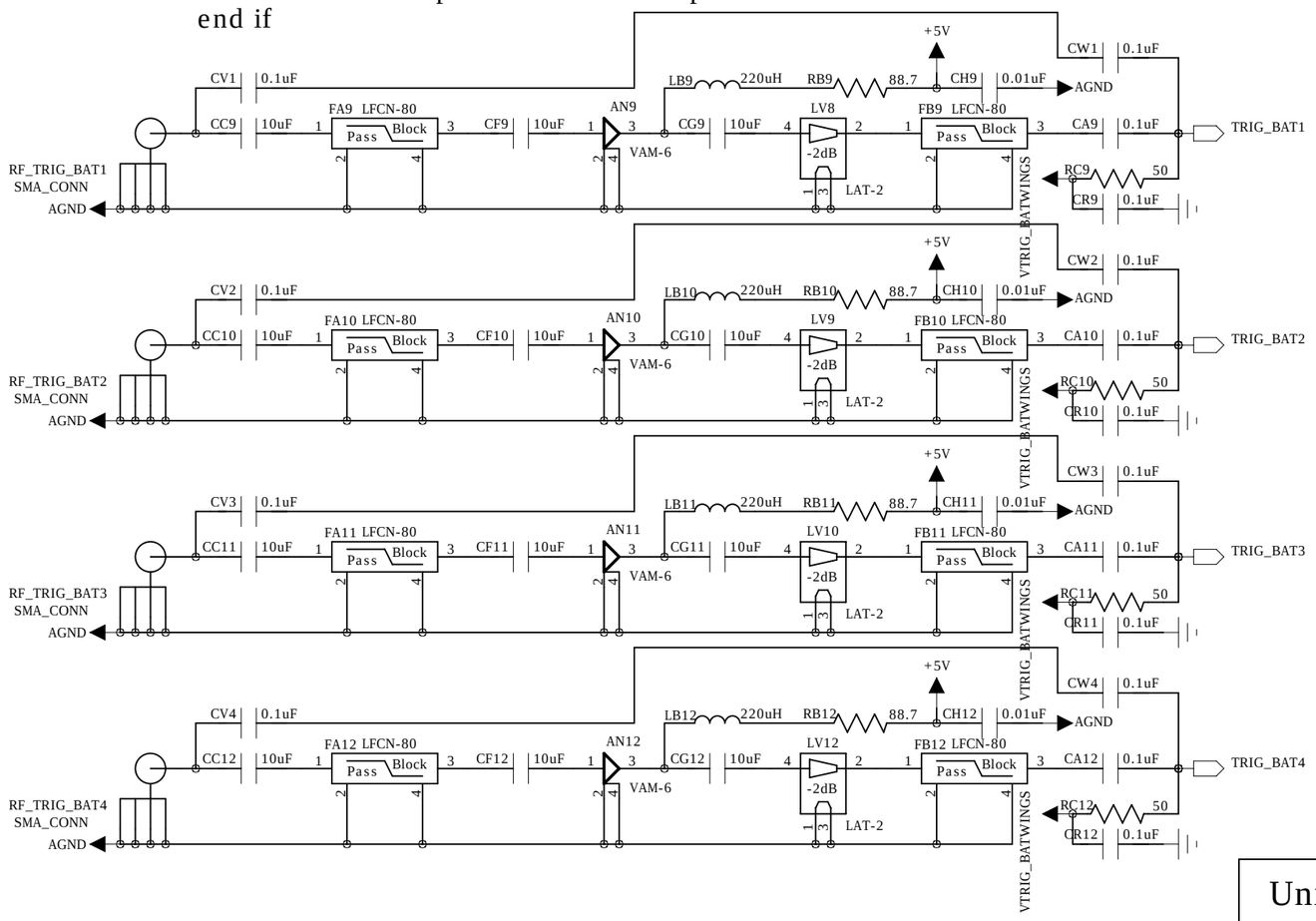

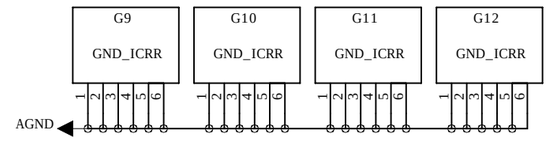

Univ. of Hawai'i -- Instr. Dev. Lab.

TITLE: Ice Cube Radio Readout (ICRR)

Design:	Page Description:	REV:
LLR	RF Input Block for Batwing Trigging	A

DATED: 15-JUNE-2007 [RF_TRIG_BATA] SHEET: 15 OF 21

if tunnel diodes are being used with batwing triggering
    then removed capacitors for bypassing amplification circuit
    and install capacitors for the amplification circuit
else
    then install capacitors for bypassing amplification circuit
    and remove capacitors for the amplification circuit
end if

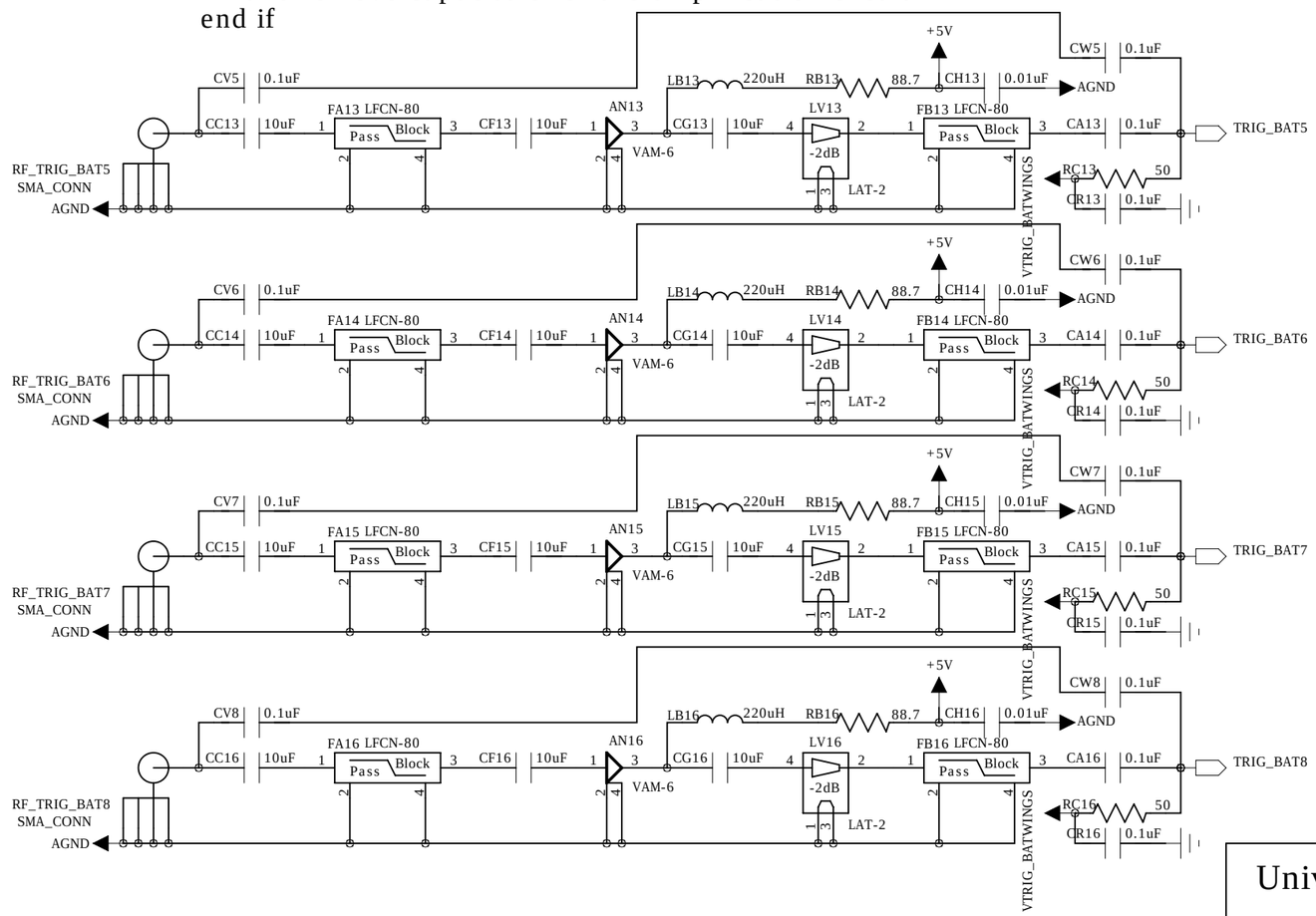

Univ. of Hawai'i -- Instr. Dev. Lab.

TITLE: Ice Cube Radio Readout (ICRR)

Design:	Page Description:	REV:
LLR	RF Input Block for Batwing Trigging	A

DATED: 15-JUNE-2007 [RF_TRIG_BATB] SHEET: 16 OF 21

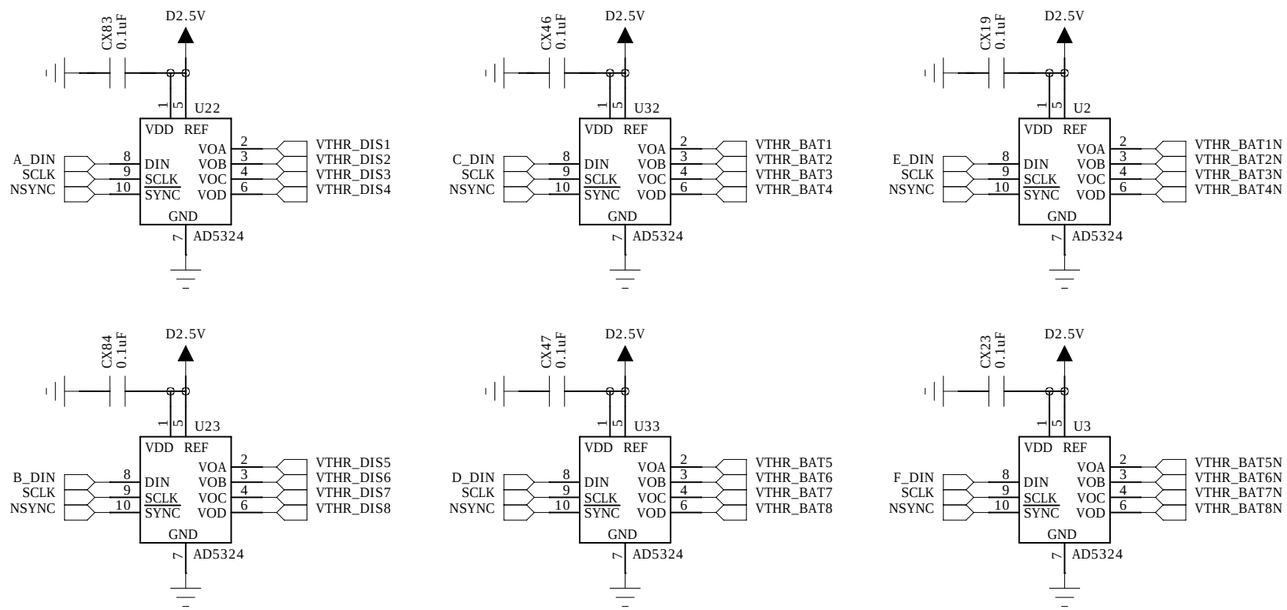

FPGA BYPASS CAPS

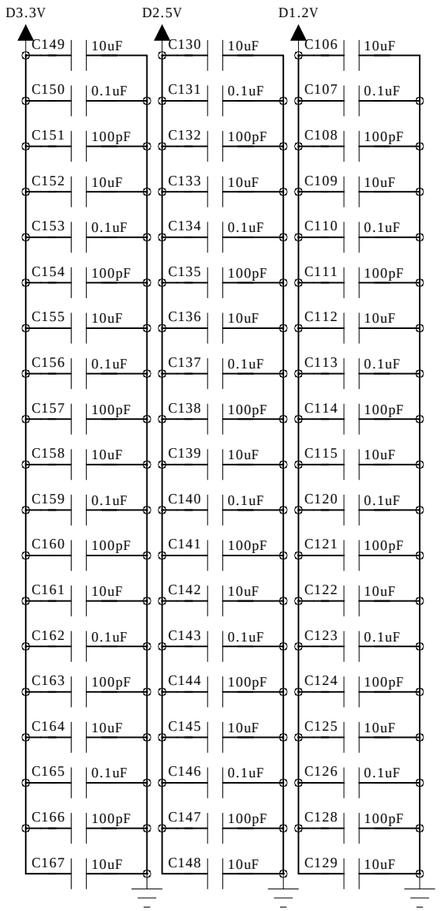

Univ. of Hawai'i -- Instr. Dev. Lab.

TITLE: Ice Cube Radio Readout (ICRR)

Design:	Page Description:	REV:
LLR	DAC Block	A

DATED: 11-JUNE-2007 [DAC] SHEET: 17 OF 21

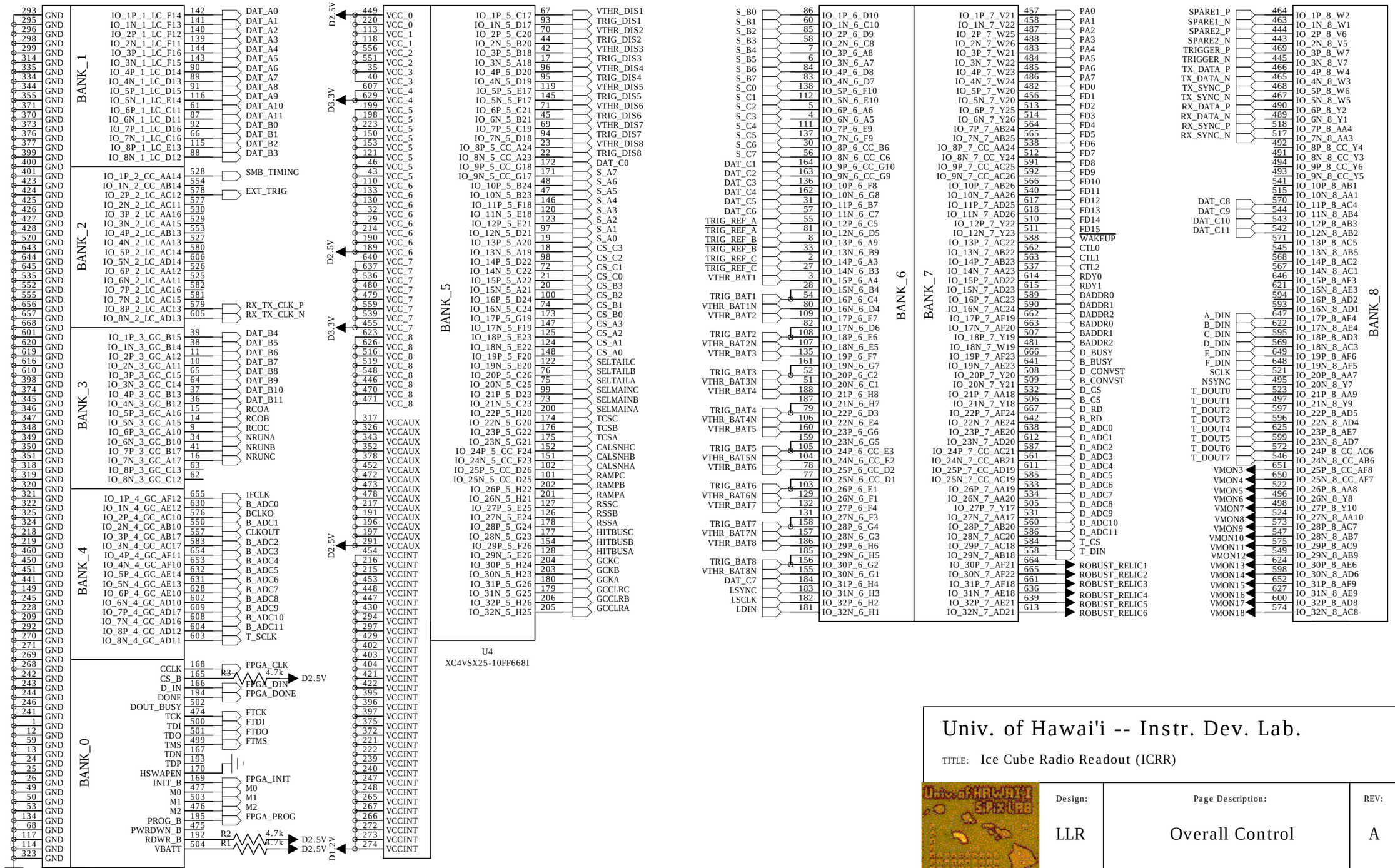

Univ. of Hawai'i -- Instr. Dev. Lab.

TITLE: Ice Cube Radio Readout (ICRR)

Design:	Page Description:	REV:
LLR	Overall Control	A

DATED: 18-JUNE-2007 [CTRL] SHEET: 18 OF 21

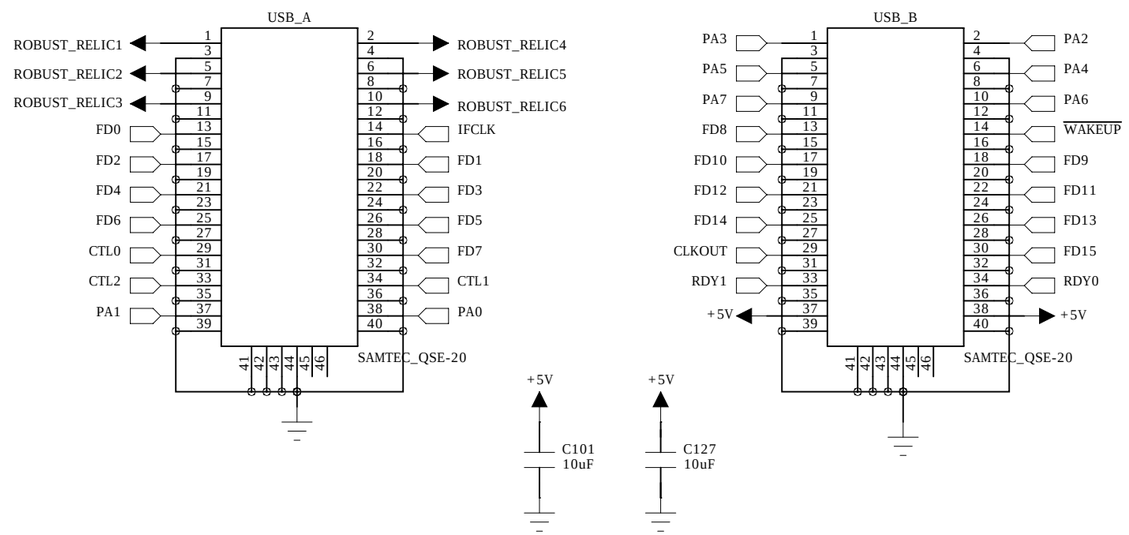

Univ. of Hawai'i -- Instr. Dev. Lab.

TITLE: Ice Cube Radio Readout (ICRR)

Design:	Page Description:	REV:
LLR	USB2.0 Interface	A

DATED: 11-JUNE-2007 [USB] SHEET: 19 OF 21

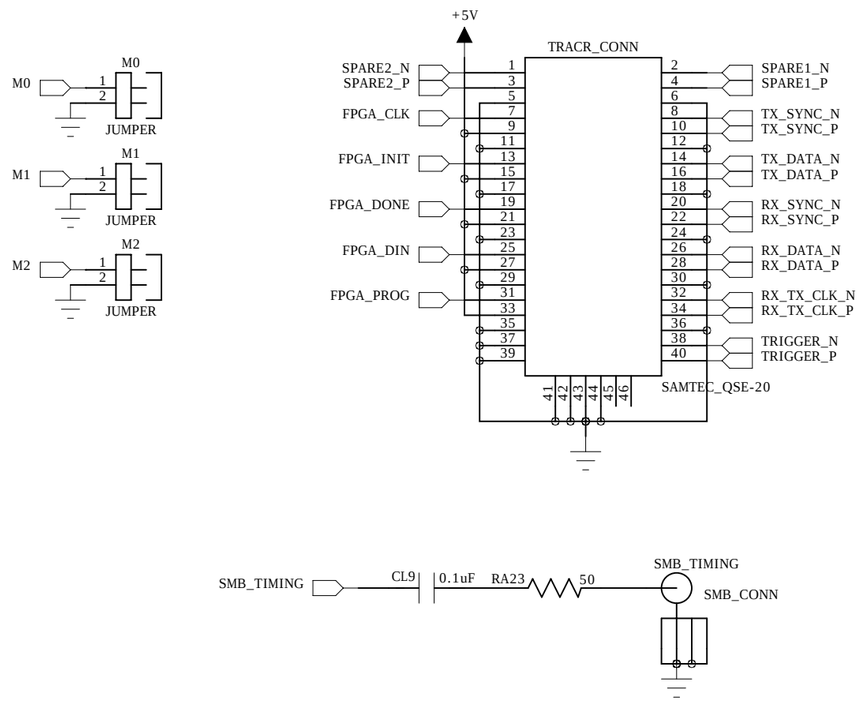

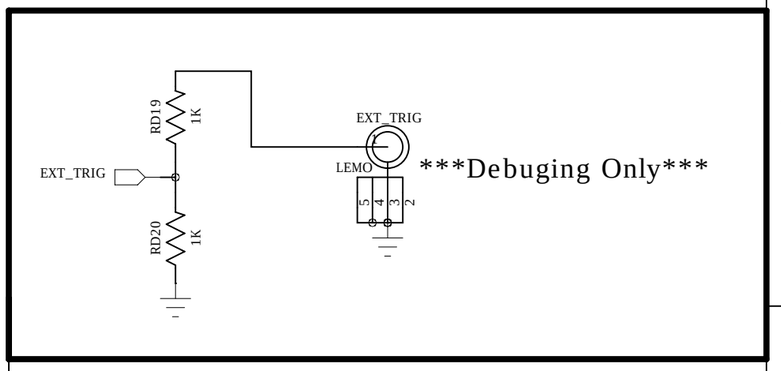

Univ. of Hawai'i -- Instr. Dev. Lab.

TITLE: Ice Cube Radio Readout (ICRR)

Design:	Page Description:	REV:
LLR	TRACR Connector Block	A

DATED: 10-JUNE-2007 [TRACR] SHEET: 20 OF 21

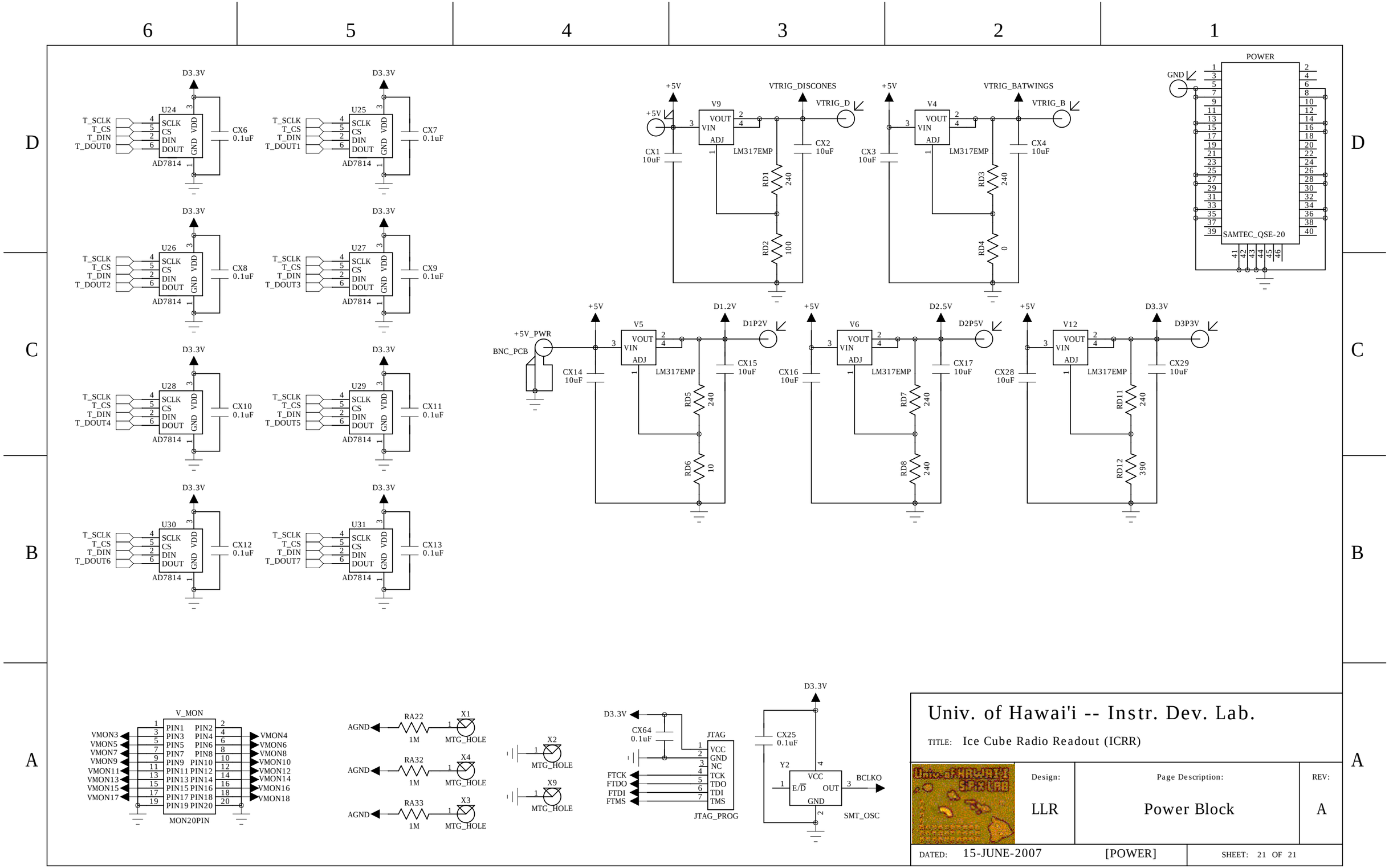

Univ. of Hawai'i -- Instr. Dev. Lab.

TITLE: Ice Cube Radio Readout (ICRR)

Design:	Page Description:	REV:
LLR	Power Block	A

DATED: 15-JUNE-2007 [POWER] SHEET: 21 OF 21