S-700S LINEAR AMPLIFIER AND SINGLE CHANNEL ANALYZER

INTRODUCTION:

This unit is designed as an economical means to separate the desired signals from those having other energies. In the Moessbauer configuration, a proportional counter tube is a very effective detector of the 14.4 Kev gamma ray emitted during the decay of CO57. The combination of speed, resolution, and selectivity is unmatched by other detectors. A charge sensitive preamplifier amplifies the signals from the proportional counter and feeds them to a double-differentiating linear amplifier. The amplifier output is fed to the linear gate circuit, which includes upper and lower level discrimination to allow selection of the pulses produced by the desired gamma rays. The linear gate delivers both a linear signal (suitable for pulse height analysis or oscilloscope viewing), and TTL logic signal which is used for counting in the multichannel-scaling (time) mode.

The SCA is not as fast as the ASA LG-200A Linear Gate but is extremely useful up to a 10 mCi source in normal configuration. If a larger source is used then the detector will have to be backed off some to lower the count rate level. The S-700S(LA) has a data through-put rate of 50Khz while the LG-200A operates at 100Khz and usable to 250 Khz.

The gain of the unit is set by a control on the rear panel of the module. This allows you to set the proper level before attempting to sort out the Kev levels. Located also on the rear panel is a 5 pin hex connector that accepts the power cable from the CSP-400 preamplifier. This supplies the +24 volts and power ground to operate the preamplifier from the NIM BIN voltage.

CONNECTIONS AND SETUP FOR USE:

The S-700S module plugs into and derives its operating voltages from a standard NIM BIN or one of the mini tabletop NIM BINS. The S-700S is designed to operate with the CSP-400E Charge Sensitive Preamplifier, or equivalent. The preamp is directly coupled to the detector (proportional counter tube) and the output of the preamplifier is connected via coaxial cable to the rear panel connector on the S-700S. See Fig. 1 on page 3 of this manual for the cabling diagram.

The Linear Amplifier and S.C.A. are both in one double wide NIM module. The High Voltage Power Supply is a separate double wide NIM module. As stated before and shown in Fig. 1, the preamplifier receives its operating power from a connector located on the rear panel of the S-700S Linear Amplifier and SCA module.

Set the High Voltage Power Supply to +1800 Volts initially, then fine tune it later for best results. In any case do not exceed the limits of the tube. Normally, the upper and lower operating limits of the tube will be provided along with the tube. ASA usually attaches this to the Proportional Counter tube instruction book to prevent loss.

TECHNICAL DESCRIPTION:

Positive voltage tail pulses from the pre-amplifier are assumed as input. A single gain control at the rear panel is provided. Additional gain control can be had by increasing or decreasing the high voltage applied to the proportional counter. *Use caution not to exceed the upper operating limits of the tube as this may damage the tube or at least shorten its lifetime.*

LINEAR AMPLIFIER:

The amplifier portion of this combined unit amplifies and shapes the preamplifier pulses. The amplifier is a non-inverting linear amplifier employing two differentiating amplifiers with time constants of approximately 200 nanoseconds and similar integration times. It has an input impedance of 100 ohms and a gain control located on the rear panel beside the input BNC connector. Discrete transistors are used because of the unavailability of integrated circuit op-amps with sufficient band-pass.

SINGLE CHANNEL ANALYZER:

The S.C.A. consists of six I.C.'s. A dual voltage comparator NE521 is the heart of the circuit and is very fast. The upper level crossing fires the one-shot Q4. The lower level crossing fires a delaying one-shot Q2 which then fires the one-shot Q3. Q5 is an AND gate, which gives an output for each lower level crossing unless vetoed by an upper level crossing within the 150ns aperture time. For each accepted pulse, Q6 fires to provide a constant-width pulse.

OPERATION:

Prior to switching on, the user should insure that the S-700S is properly inserted into the NIM BIN. Connect a 5 pin connector cable (supplied with the Preamplifier CSP-400) from the rear of the S-700S Linear Amplifier to the 5 pin male jack on the CSP-400.

Positive high voltage (nominally +1800volts) for the detector should be connected to the preamplifier, and the preamplifier output should be connected to the linear amplifier input by means of a 100 ohm coax cable. The equipment should then be set up as follows:

Mount the source about 3 to 4" from the detector. A Kr-Co2 proportional counter tube gives satisfactory performance at +1600 to +1900 volts. Consult technical info that comes with the tube for exact range. The Preamplifier is set for Gain X1, Positive output and matches the input to this amplifier. A 1/8" Plexiglas filter between source and detector is useful for attenuation of the 6 Kev X-rays to help identify the energy levels on the oscilloscope screen.

The linear output of the Linear Amplifier should look like the waveform in Fig. 2 when connected to a 30mhz (or faster) oscilloscope and the gain adjusted until the pulses are displayed as shown. The 14.4 Kev gamma line should have an amplitude of between 2 and 3 volts. Adjust the amplifier gain control (on the rear panel), for best results.

Fig. 2 represents the three prominent energy levels seen with the 6Kev Xrays the strongest. The 14 Kev or other desired gamma ray should be about half the limiting voltage. Adjust the gain control to achieve this. The waveforms in Fig.s 1-4 are referenced to a CO57 source. The waveforms will not appear exactly as illustrated due to differences in oscilloscopes, cables and other changes. But the waveform should be similar.

Fig. 1 to the right shows the cabling and connections of the preamplifier to the linear amplifier/SCA and High Voltage Power Supply.

Fig. 2 shows the expected Kev lines with CO57 Mossbauer source. Using the 1/8" Plexiglas filter while observing this waveform will lower the intensity of the 6 Kev line. This helps identify the 14.4 Kev line more easily.

The S.C.A. adjustment is most readily done by using the S.C.A. gated output as trigger for the oscilloscope and examining the overshoot. The single channel analyzer must be set in such a way that only 14 Kev events (if CO57) are counted. The best way to do this is to use the SCA output as external trigger for the oscilloscope. The SCA or gated signal is available at about the crossover point in the diagram. Hence, with the upper level set high (fully counter clock wise), and the lower level set low (fully clock wise), the display becomes as in Fig. 3.

Now adjust the discriminators to isolate the 14.4 Kev line. The desired pulse is then selected by adjusting the upper and lower level discriminators until it is isolated as in Fig. 4.

Other ways of setting the discriminators are:

- use the oscilloscope to examine the LINEAR output with the internal trigger and adjust to pass the desired pulses. Difficult, but possible.
- for some, older MCA's which have an internal delay line in the PHA circuit, the SAC output can be used as 'coincidence', and this isolates that part of the pulse height spectrum selected by the S-700SCA.

See the following page for setting the discriminators with a PCA3 computer MCA data acquisition card.

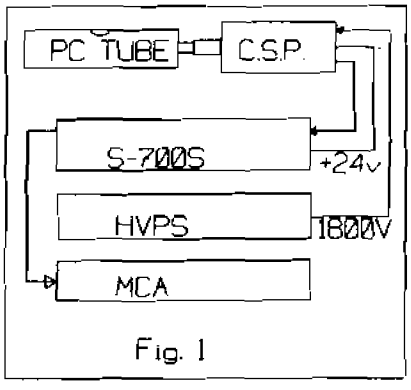

Fig. 1

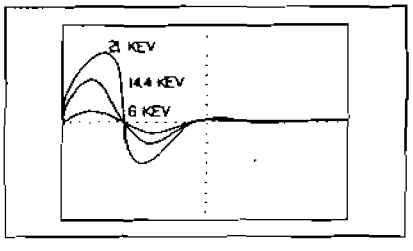

Fig. 2

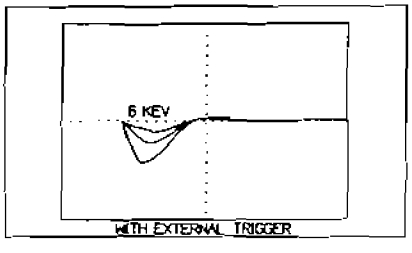

Fig. 3

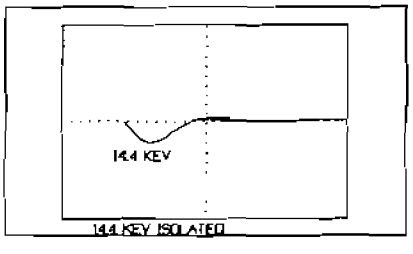

Fig. 4

SETTING THE S-700SCA DISCRIMINATORS WITH THE PCA3

If you prefer, and if you have a PCA3 board in your computer, you can set the S-700SCA discriminators much the same way you would use an MCA. This is done using the PHA mode of the PCA3 and using the S-700SCA (gated)) output as the coincidence. Make sure the NIM BIN, High Voltage Power Supply, Linear Amplifier/SCA, Preamplifier and Detector are all cabled correctly and in the 'ON' position. There must be a source installed of course. For this instruction, a CO57 Mossbauer source was used. Connect the Linear output of the S-700S with a BNC cable to the rear panel BNC connector on the PCA3. This is the only BNC connector installed on the card itself. The S-700S is internally connected to the SCA input.

Set up the PCA3 card to operate in PHA mode. Set the range (scale) for about 8K. Erase all previous data from the screen. (^F2)

Start acquire by pressing F1 on the computer keyboard. You should see a PHA spectrum form with noise and escape peaks on the left of the screen, then will come the 6 KEV peak, then the 14.4 KEV (weaker), and still further out will be the 21 KEV peak (weakest). See Fig. 1 next page.

Remember where the 14.4 KEV peak is by placing the cursor on it to mark the channel number.

Press F1 to stop acquire.
Erase the data from the screen. (^F2)

Connect the S-700S SCA output to the PCA3 pigtail GATE input. Open the windows by turning the upper discriminator full CCW (counter clockwise). Turn the lower discriminator control full CW.

Start collecting data again by pressing F1 and adjust the LLD (lower discriminator) control CCW until all channels to the left of the 14.4 KEV peak stop moving. Press F1 to stop acquire and press ^F2 to erase the screen. Press F1 again to acquire data and it should look like Fig. 2 on the next page.

Press F1 to start collecting data again and adjust the ULD (upper discriminator) control CW until all channels to the right of the 14.4 KEV peak stop moving. Press F1 again to stop acquire and press ^F2 to erase the screen.

You may have to go back and fine tune the above adjustments but the end result will be just one peak on the screen close to where you placed the cursor before and there should be nothing else on either side of the 14.4 KEV peak rising from the base line. See Fig. 3.

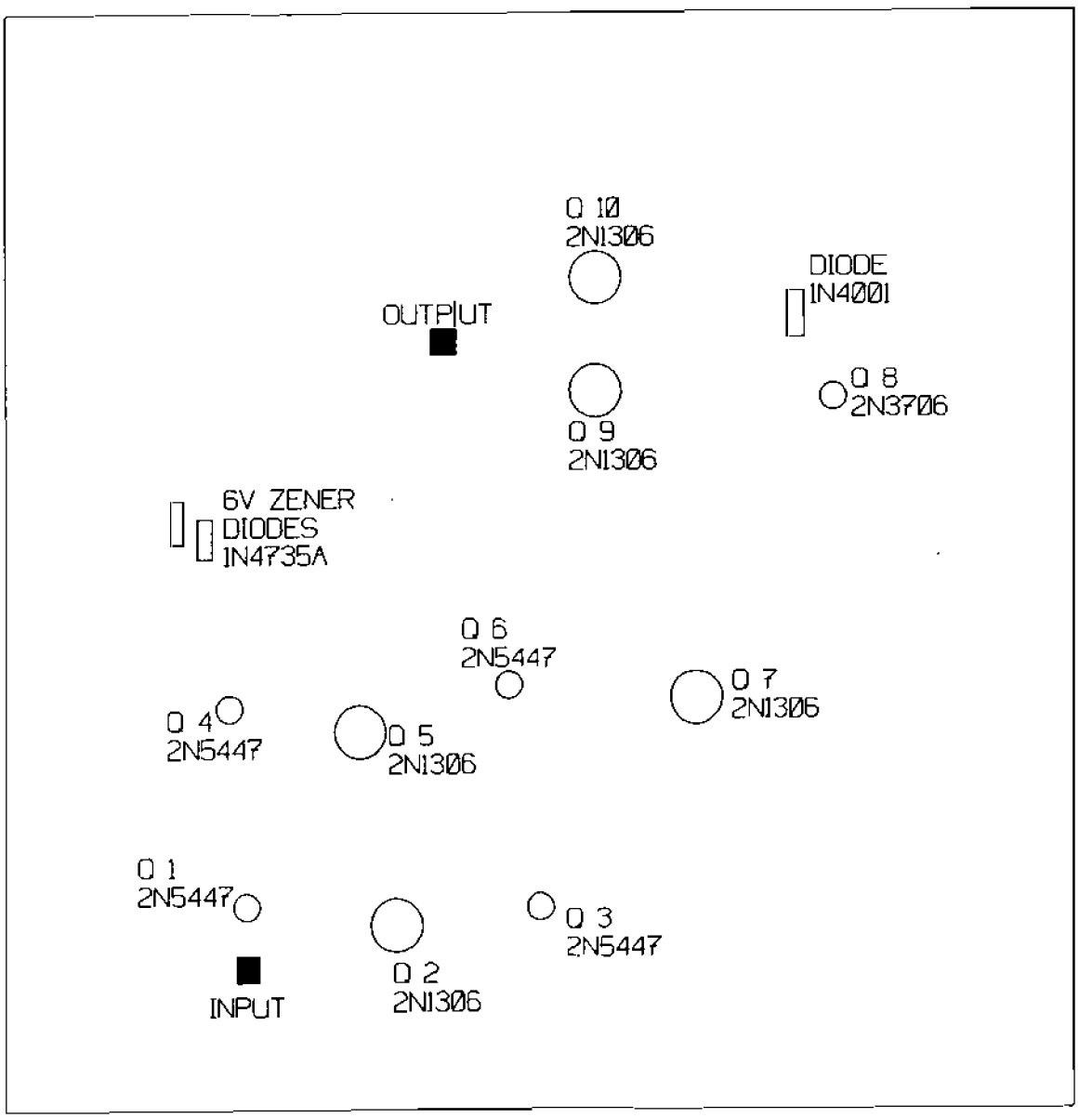

ACTIVE COMPONENTS
PCB LAY-OUT
Austin Science Associates, Inc.

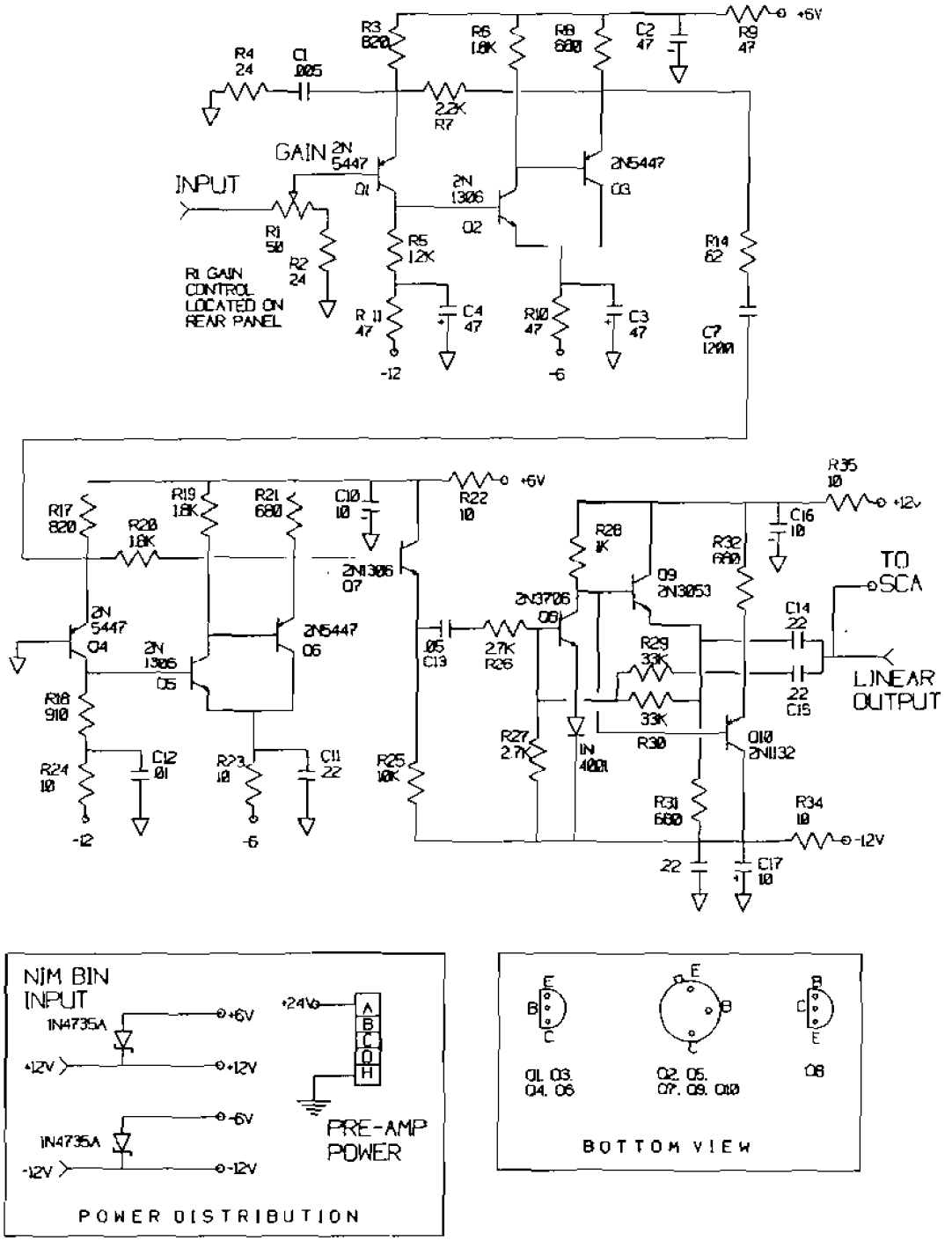

LINEAR AMPLIFIER
SCHEMATIC
Austin Science Associates, Inc

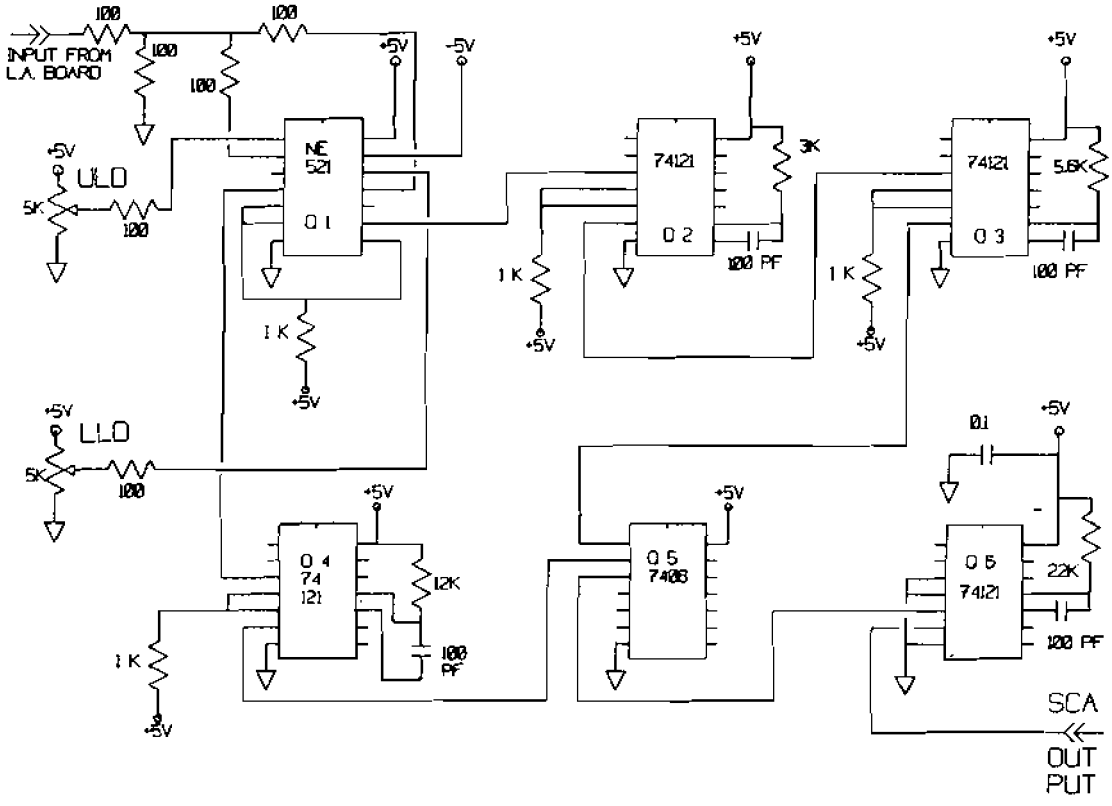

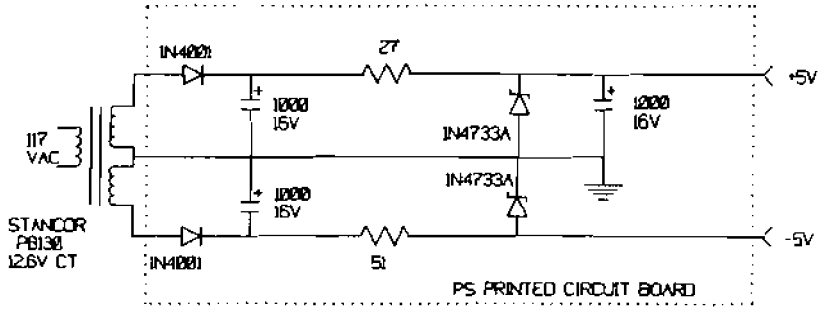

POWER SUPPLY

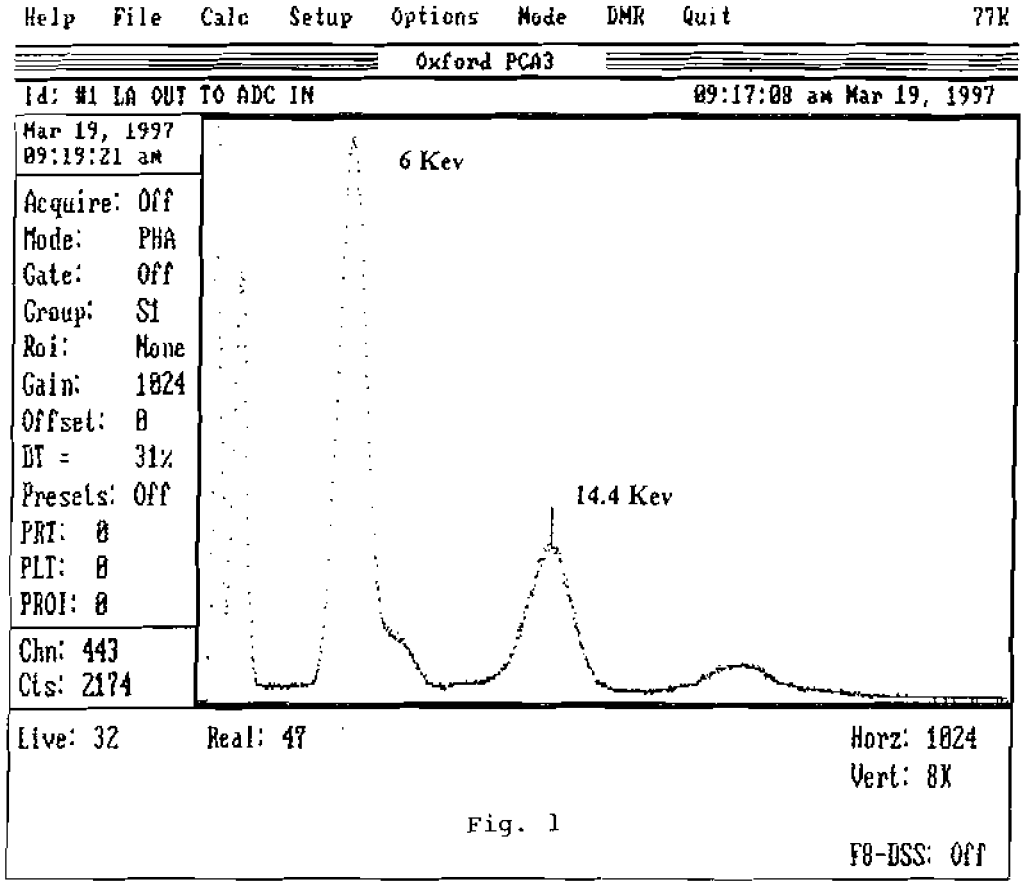
Help File Calc Setup Options Mode DMR Quit 77K
Oxford PCA3
Id: #1 LA OUT TO ADC IN 09:17:08 am Mar 19, 1997
Mar 19, 1997
09:19:21 am
Acquire: Off
Mode: PHA
Gate: Off
Group: S1
Roi: None
Gain: 1024
Offset: 0
DT = 31%
Presets: Off
PRT: 0
PLT: 0
PROI: 0
Chn: 443
Cts: 2174
6 Kev
14.4 Kev
Live: 32 Real: 47
Horz: 1024
Vert: 8K
F8-DSS: Off
F1-Acquire F2-Erase F3-Preset F4-Expand F5-Ident F6-Load F7-Save Esc-ROI

Fig. 1

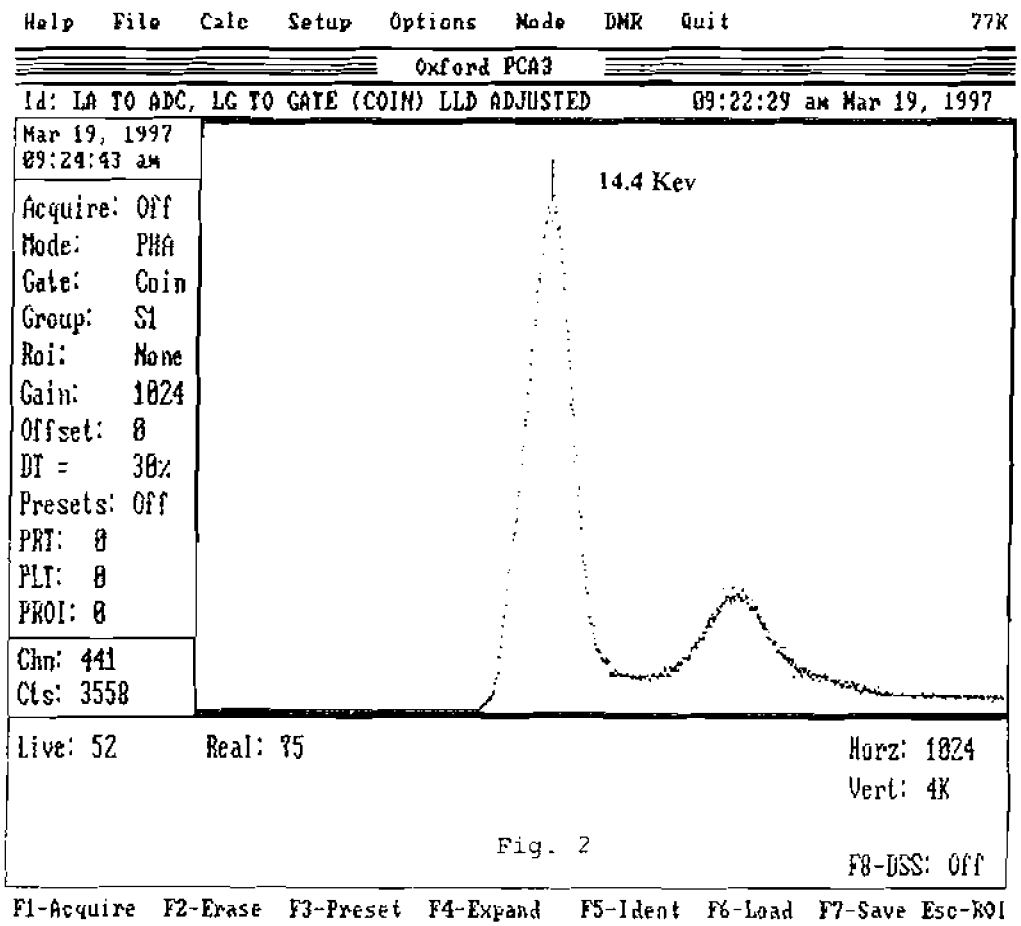
Help File Calc Setup Options Mode DMR Quit 77K
Oxford PCA3
Id: LA TO ADC, LG TO GATE (COIN) LLD ADJUSTED 09:22:29 am Mar 19, 1997
Mar 19, 1997
09:24:43 am
Acquire: Off
Mode: PHA
Gate: Coin
Group: S1
Roi: None
Gain: 1024
Offset: 0
DT = 38%
Presets: Off
PRT: 0
PLT: 0
PROI: 0
Chn: 441
Cts: 3558
14.4 Kev
Live: 52 Real: 75
Horz: 1024
Vert: 4K
F8-DSS: Off
F1-Acquire F2-Erase F3-Preset F4-Expand F5-Ident F6-Load F7-Save Esc-ROI

Fig. 2

Help File Calc Setup Options Mode DMR Quit 77K

Oxford PCA3

Id: SAME SETTINGS, HLD ADJUSTMENT 09:27:14 am Mar 19, 1997

Mar 19, 1997
09:29:34 am

Acquire: Off
Mode: PHA
Gate: Coin
Group: Si
Roi: None
Gain: 1024
Offset: 0
DT = 24%
Presets: Off
PRT: 0
PLT: 0
PROI: 0

Chn: 441
Cts: 3716

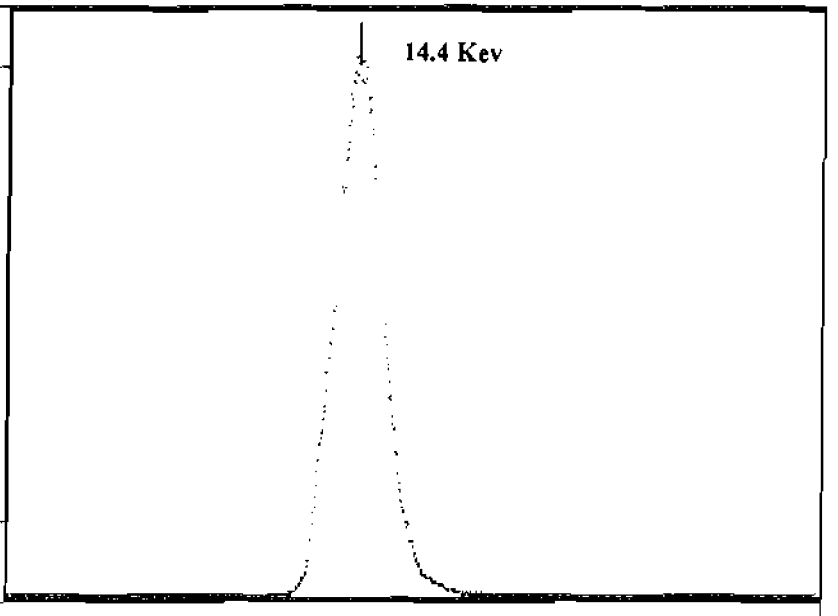

Live: 56 Real: 75 Horz: 1024
Vert: 4K

Fig. 3

F8-DSS: Off

F1-Acquire F2-Erase F3-Preset F4-Expand F5-Ident F6-Load F7-Save Esc-ROI